BOSCH

Register your new device on MyBosch now and get free benefits:
bosch-home.com/welcome

MyBosch

Microwave

BEL524MS0W

[en]	Instruction manual	Built-in microwave	3
[zh]	说明手册	微波炉[嵌入式]	24

Table of contents

Intended use 4

Important safety information 4

General information 4
Microwave 5

Installation and connection 6

Causes of damage 7

Environmental protection 7

Environmentally-friendly disposal 7

Getting to know your appliance 7

Control panel 7
Controls 8
Changing the signal duration 8

Accessories 9

Special accessories 9

Before using for the first time 9

Cleaning the cooking compartment and putting the turntable in place 9
Setting the clock 9
Heating up the cooking compartment 10

Microwave 10

Cookware 10
Microwave power settings 10
Setting the microwave 11

Grilling 11

Setting the grill 11
Setting the microwave and grill 11

Memory 12

Saving memory settings 12
Starting the memory 12

Programmes 13

Setting a programme 13
Defrosting using the automatic programmes 13
Cooking with the automatic programmes 14
Combi-cooking programme 14

Cleaning 14

Cleaning agent 14

Basic settings 15

Trouble shooting 16

Customer service 17

E number and FD number 17
Technical specifications 17

Tested for you in our cooking studio 18

Suitable ovenware 18
Unsuitable cookware 18
Defrosting 18
Heating frozen food 19
Heating food 20
Cooking food 20
Microwave tips 22

Test dishes 23

Additional information on products, accessories, replacement parts and services can be found at **www.bosch-home.com** and in the online shop **www.bosch-eshop.com**

Intended use

Read these instructions carefully. Only then will you be able to operate your appliance safely and correctly. Retain the instruction manual and installation instructions for future use or for subsequent owners.

This appliance is only intended to be fully fitted in a kitchen. Observe the special installation instructions.

Check the appliance for damage after unpacking it. Do not connect the appliance if it has been damaged in transport.

Only a licensed professional may connect appliances without plugs. Damage caused by incorrect connection is not covered under warranty.

This appliance is intended for domestic use only. The appliance must only be used for the preparation of food and drink. The appliance must be supervised during operation. Only use this appliance indoors.

This appliance is intended for use up to a maximum height of 4000 metres above sea level.

This appliance may be used by children over the age of 8 years old and by persons with reduced physical, sensory or mental capabilities or by persons with a lack of experience or knowledge if they are supervised or are instructed by a person responsible for their safety how to use the appliance safely and have understood the associated hazards.

Children must not play with, on, or around the appliance. Children must not clean the appliance or carry out general maintenance unless they are at least 15 years old and are being supervised.

Keep children below the age of 8 years old at a safe distance from the appliance and power cable.

Always place the accessories into the cooking compartment correctly. ⟶ "Before using for the first time" on page 9

Important safety information

General information

⚠ Warning – Risk of fire!

- Combustible items stored in the cooking compartment may catch fire. Never store combustible items in the cooking compartment. Never open the appliance door if there is smoke inside. Switch off the appliance and unplug it from the mains or switch off the circuit breaker in the fuse box.
- The appliance becomes very hot. If the appliance is installed in a fitted unit with a decorative door, heat will accumulate when the decorative door is closed. Only operate the appliance when the decorative door is open.

⚠ Warning – Risk of electric shock!

- To avoid possible electric shocks, make sure the appliance is disconnected from the power before changing the lamp.
- Incorrect repairs are dangerous. Repairs may only be carried out and damaged power cables replaced by one of our trained after-sales technicians. If the appliance is defective, unplug the appliance from the mains or switch off the circuit breaker in the fuse box. Contact the after-sales service.
- The cable insulation on electrical appliances may melt when touching hot parts of the appliance. Never bring electrical appliance cables into contact with hot parts of the appliance.
- Do not use any high-pressure cleaners or steam cleaners, which can result in an electric shock.
- Penetrating moisture may cause electric shock. Never subject the appliance to intense heat or humidity. Only use this appliance indoors.
- A defective appliance may cause electric shock. Never switch on a defective appliance. Unplug the appliance from the mains or switch off the circuit breaker in the fuse box. Contact the after-sales service.
- The appliance is a high-voltage appliance. Never remove the casing.

⚠ Warning – Risk of burns!

- The appliance becomes very hot. Never touch the interior surfaces of the cooking compartment or the heating elements. Always allow the appliance to cool down. Keep children at a safe distance.

- Accessories and ovenware become very hot. Always use oven gloves to remove accessories or ovenware from the cooking compartment.
- Alcoholic vapours may catch fire in the hot cooking compartment. Never prepare food containing large quantities of drinks with a high alcohol content. Only use small quantities of drinks with a high alcohol content. Open the appliance door with care.

⚠ Warning – Risk of scalding!

- When you open the appliance door, hot steam may escape. Open the appliance door with care. Keep children at a safe distance.
- Water in a hot cooking compartment may create hot steam. Never pour water into the hot cooking compartment.

⚠ Warning – Risk of injury!

Scratched glass in the appliance door may develop into a crack. Do not use a glass scraper, sharp or abrasive cleaning aids or detergents.

Microwave

⚠ Warning – Risk of fire!

- Using the appliance for anything other than its intended purpose is dangerous and may cause damage.
  The following is not permitted: drying out food or clothing, heating slippers, grain or cereal pillows, sponges, damp cleaning cloths or similar.
  For example, heated slippers and grain or cereal pillows may catch fire, even several hours after they have been heated.The appliance must only be used for the preparation of food and drinks.
- Food may catch fire. Never heat food in heat-retaining packages.
  Do not leave food heating unattended in containers made of plastic, paper or other combustible materials.
  Do not select a microwave power or time setting that is higher than necessary. Follow the information provided in this instruction manual.
  Never use the microwave to dry food.
  Never defrost or heat food with a low water content, e.g. bread, at too high a microwave power or for too long.
- Cooking oil may catch fire. Never use the microwave to heat cooking oil on its own.

⚠ Warning – Risk of explosion!

Liquids and other food may explode when in containers that have been tightly sealed. Never heat liquids or other food in containers that have been tightly sealed.

⚠ Warning – Risk of burns!

- Foods with peel or skin may burst or explode during, or even after, heating. Never cook eggs in their shells or reheat hard-boiled eggs. Never cook shellfish or crustaceans. Always prick the yolk when baking or poaching eggs. The skin of foods that have a peel or skin, such as apples, tomatoes, potatoes and sausages, may burst. Before heating, prick the peel or skin.
- Heat is not distributed evenly through baby food. Never heat baby food in closed containers. Always remove the lid or teat. Stir or shake well after the food has been heated. Check the temperature of the food before it is given to the child.
- Heated food gives off heat. The ovenware may become hot. Always use oven gloves to remove ovenware or accessories from the cooking compartment.
- Airtight packaging may burst when food is heated. Always observe the instructions on the packaging. Always use oven gloves to remove dishes from the cooking compartment.
- The accessible parts become very hot when in operation. Never touch hot parts. Keep children at a safe distance.
- Using the appliance for anything other than its intended purpose is dangerous.
  You are not permitted to use it to dry food or clothing or to warm slippers, grain or cereal pillows, sponges, damp cleaning cloths or the like.
  This is because, for instance, overheated slippers, grain or cereal pillows, sponges and damp cleaning cloths, etc., may cause burns to the skin.

⚠ Warning – Risk of scalding!

- There is a possibility of delayed boiling when a liquid is heated. This means that the liquid reaches boiling temperature without the usual steam bubbles rising to the surface. Even if the container only vibrates a little, the hot liquid may suddenly boil over and spatter. When heating, always place a spoon in the container. This will prevent delayed boiling.

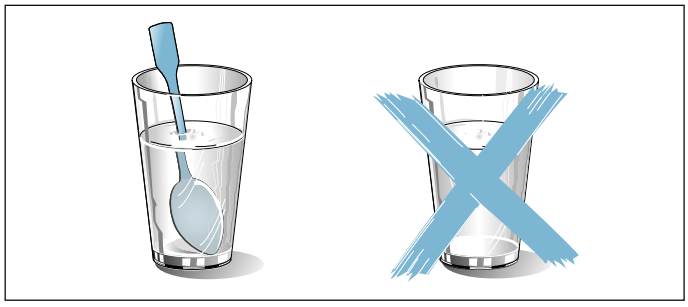

⚠ Warning – Risk of injury!

- Scratched glass in the appliance door may develop into a crack. Do not use a glass scraper, sharp or abrasive cleaning aids or detergents.
- Unsuitable ovenware may crack. Porcelain or ceramic ovenware can have small perforations in the handles or lids. These perforations conceal a cavity below. Any moisture that penetrates this cavity could cause the ovenware to crack. Only use microwave-safe ovenware.
- If using the appliance in microwave mode only, placing cookware and containers made of metal or featuring metal detailing inside the appliance may cause sparks when the appliance is operating. This may damage the appliance. Never use metal containers when using the appliance in microwave mode only.
- Using unsuitable cookware may result in damage. For microwave combination mode, always use cookware made from suitable materials that can also withstand the temperatures used for hot air and grilling modes.
- The glass turntable may splinter.Never allow hard objects to strike the turntable.
- Cracks or chinks in the glass turntable are dangerous. Handle the turntable with care.

⚠ Warning – Risk of electric shock!

The appliance is a high-voltage appliance. Never remove the casing.

⚠ Warning – Risk of serious damage to health!

- The surface of the appliance may become damaged if it is not cleaned properly. Microwave energy may escape. Clean the appliance on a regular basis, and remove any food residue immediately. Always keep the cooking compartment, door seal, door and door stop clean. ⟶ "Cleaning" on page 14
- Microwave energy may escape if the cooking compartment door or the door seal is damaged. Never use the appliance if the cooking compartment door or the door seal is damaged. Contact the after-sales service.
- Microwave energy will escape from appliances that do not have any casing. Never remove the casing. For any maintenance or repair work, contact the after-sales service.

Installation and connection

This appliance is designed for domestic use only.

This appliance is designed to be fully integrated into kitchen units.

Please follow the dedicated installation instructions.

The appliance has a plug, connect it to a properly grounded outlet.

Only a qualified electrician may install the socket or replace the power cable.If the plug is no longer accessible once the appliance has been installed, an all-pole isolating switch with a contact gap of at least 3 mm must be provided for the wiring.

Do not use multi-socket adaptors, power strips or extension leads. Overloading causes a risk of fire.

The appliance can be installed in a wall-hung cabinet measuring 60 cm wide (it must be at least 30 cm deep and 85 cm above the floor).

Causes of damage

Caution!

- **Heavily soiled seal:** If the seal is very dirty, the appliance door will no longer close properly during operation. The fronts of adjacent units could be damaged. Always keep the seal clean.
- **Operating the microwave without food:** Operating the appliance without food in the cooking compartment may lead to overloading. Never switch on the appliance unless there is food in the cooking compartment.The only exception to this rule is when performing a short cookware test.⟶ "Cookware test" on page 10
- **Microwave popcorn:** Never set the microwave power too high. Use a power setting no higher than 600 watts. Always place the popcorn bag on a glass plate. The disc may jump if overloaded.
- Liquid that has boiled over must not be allowed to run through the turntable drive into the interior of the appliance. Monitor the cooking process. Choose a shorter cooking time initially, and increase the cooking time as required.
- Never use the microwave oven without the turntable.
- **Creation of sparks:** Metal - e.g. a spoon in a glass - must be kept at least 2 cm from the oven walls and the inside of the door. Sparks could irreparably damage the glass on the inside of the door.
- **Foil containers:** Do not use foil containers in the appliance. They damage the appliance by producing sparks.
- **Cooling with the appliance door open:** Only leave the cooking compartment to cool with the door closed. Do not trap anything in the appliance door. Even if the door is only slightly ajar, the fronts of adjacent units may be damaged over time.
- **Condensation in the cooking compartment:** Condensation may appear on the door window, interior walls and floor. This is normal and does not adversely affect microwave operation. To prevent corrosion, wipe off the condensation every time you cook.

Environmental protection

Environmentally-friendly disposal

Dispose of packaging in an environmentally-friendly manner.

This appliance is labelled in accordance with European Directive 2012/19/EU concerning used electrical and electronic appliances (waste electrical and electronic equipment - WEEE). The guideline determines the framework for the return and recycling of used appliances as applicable throughout the EU.

Getting to know your appliance

In this section, we will explain the display and controls.You will also find out about the various functions of your appliance.

Note: Depending on the appliance model, individual details and colours may differ.

Control panel

You can set your appliance's various functions on the control panel. The current settings are shown on the display.

The overview shows the control panel when the appliance is switched on with a clock time that has been set.

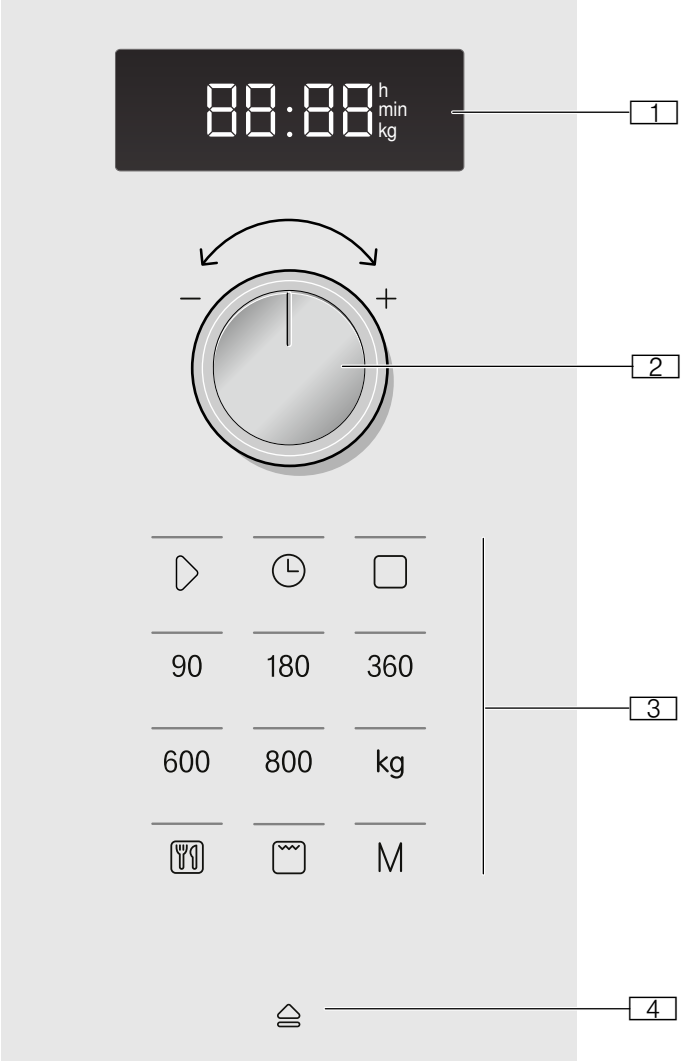

1 **Display**
For clock and cooking times

2 **Rotary selector**
For setting the clock and cooking times or for setting automatic programmes

3 **Buttons**

4 **Automatic door opening button**

Controls

You will find a brief explanation of the various buttons below. These buttons allow you to set your appliance simply and directly.

Buttons and their meaning

You will find a brief explanation of the various buttons below.

Buttons	Meaning
Symbol	
▷	Start the appliance
◷	Setting the time
□	Stop or pause the appliance
90	Select a microwave power output of 90 watts
180	Select a microwave power output of 180 watts
360	Select a microwave power output of 360 watts
600	Select a microwave power output of 600 watts
800	Select a microwave power output of 800 watts
kg	Select a weight for the programmes
	Select automatic programmes
	Select the grill
M	Select the memory
	Open appliance door

Rotary selector

The rotary selector is used to alter the default values and set values.

The rotary selector is retractable. Press on the rotary selector to lock it in or out.

Automatic door opening

The appliance door springs open if you activate the automatic door opening. You can fully open the appliance door manually.

The automatic door opening does not work in the event of a power cut. You can open the door manually.

Notes

- If you open the appliance door during operation, the operation is paused.
- When you close the appliance door, the operation does not continue automatically. You must restart the operation manually.
- If the appliance has been switched off for a long time, the appliance door will open after a time delay.

Cooling fan

The appliance is equipped with a cooling fan. The fan may run on even if the oven has been switched off.

Notes

- The cooking compartment remains cold during microwave operation. The cooling fan will still switch on. The fan may run on even when microwave operation has ended.
- Condensation may appear on the door window, interior walls and floor. This is normal and does not adversely affect microwave operation. Wipe away the condensation after cooking.

Changing the signal duration

You will hear a signal when the appliance is switched off. You can change the duration of the acoustic signal.

Press the ▷ button for approx. 6 seconds.

The new signal duration is adopted.
The clock reappears.

The following are possible:
Short signal duration - 3 tones
Long signal duration - 30 tones.

Accessories

Below, you will find an overview of the accessories included and information on how to use them correctly.

Caution!
When removing dishes, make sure that the turntable does not move. Make sure that the turntable is properly locked. The turntable can turn left or right.

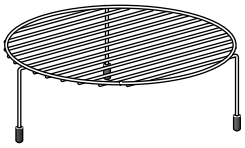

Wire rack
Wire rack for grilling, e.g. steak, sausages or bread, or for setting down cookware, e.g. shallow ovenproof dishes.

Note: Place the wire rack onto the turntable.

Turntable

Note: Never use the appliance without the turntable.Make sure that it is properly engaged. The turntable can turn clockwise or anti-clockwise.

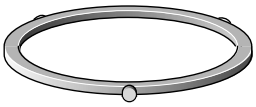

Roller ring

Special accessories

Special accessories can be purchased from our after-sales service, from specialist retailers, or online. You will find a comprehensive range of products in our brochures and online.

Their availability and whether it is possible to order them online varies from country to country. Please see our sales brochures for more details.

Note: Not all special accessories are suitable for every appliance. When purchasing, please always quote the exact identification number (E-no.) of your appliance.
⟶ "Customer service" on page 17

Steaming utensils	For cooking rice, potatoes and vegetables

Before using for the first time

This section tells you what you need to do before using your microwave to prepare food for the first time. Read the section entitled "Safety information" beforehand.
⟶ "Important safety information" on page 4

Before you can use your new appliance, you will need to put the turntable in place correctly. You must also clean the cooking compartment and accessories.

Cleaning the cooking compartment and putting the turntable in place

Before using the appliance to prepare food for the first time, you must clean the cooking compartment and accessories.

How to put the turntable in place

1. Place the roller ring **a** into the recess in the cooking compartment.
2. Make sure that the turntable **b** engages in the drive **c** in the centre of the cooking compartment floor.

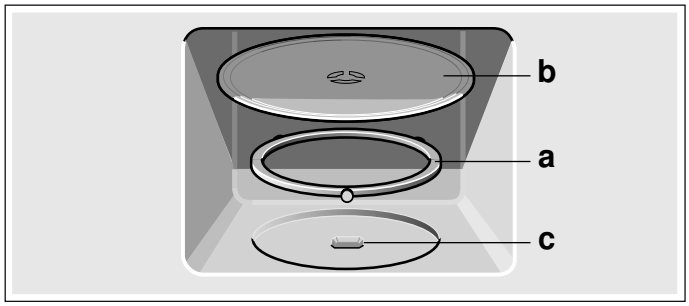

Note: Never use the appliance without the turntable. Make sure that it is properly engaged.The turntable can turn clockwise or anti-clockwise.

Setting the clock

When the appliance is first connected or after a power cut, three zeros will appear in the display panel.

1. Press the ◷ button.
   12:00 h appears in the display and the indicator lamp above the ◷ button lights up.
2. Set the clock using the rotary selector.
3. Press the ◷ button again.

The current time is set.

Hiding the clock

Press the ◷ button and then press ☐ button.
The display is blank.

Resetting the clock

Press the ◷ button.
"12:00" appears in the display. Make settings as detailed in points 2 and 3.

Change the clock, e.g. from summer to winter time

Set as described in point 1 to 3.

Heating up the cooking compartment

To get rid of the new appliance smell, heat up the cooking compartment when it is empty, the door is closed and with the turntable inserted, for 10 minutes.

1. Press the Grill button.
   10:00 min appears in the display and the indicator lamp above the button lights up.
2. Press the ▷ button.

A signal sounds once the time has elapsed. Press the button or open the appliance door.

Microwave

You can use the microwave to cook, heat up or defrost food quickly. You can use the microwave on its own or in combination with the grill.

To ensure optimum use of the microwave, please observe the notes on cookware and familiarise yourself with the data in the application tables at the end of the instruction manual.

Try out the microwave straight away. You could heat up a cup of water for your tea, for example.

Use a large cup without any decorative gold or silver trim and place a teaspoon in it. Place the cup containing the water on the turntable, slightly off-centre.

1. Press 800 W.
2. Use the rotary selector to set to 1:30 minutes.
3. Press the ▷ button.

A signal sounds after 1 minute and 30 seconds. The water is hot.

⚠ Warning – Risk of scalding!
There is a possibility of delayed boiling when a liquid is heated. This means that the liquid reaches boiling temperature without the usual steam bubbles rising to the surface. Even if the container only vibrates a little, the hot liquid may suddenly boil over and spatter. When heating, always place a spoon in the container. This will prevent delayed boiling.

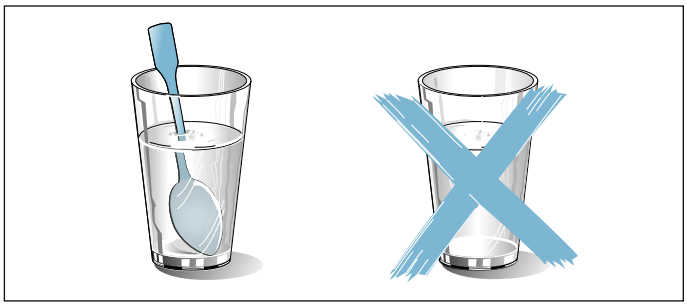

Cookware

Not all cookware is microwavable. So that your food is heated and the appliance is not damaged, only use microwavable cookware.

Suitable cookware

Heat-resistant cookware made of glass, glass ceramic, porcelain, ceramic or heat-resistant plastic are suitable. These materials allow microwaves to pass through.

You can also use serving dishes. This saves you having to transfer food from one dish to another. You should only use cookware with decorative gold or silver trim if the manufacturer guarantees that they are suitable for use in microwaves.

Unsuitable cookware

Metal cookware is unsuitable. Metal does not allow microwaves to pass through. Food in covered metal containers will remain cold.

Caution!

Creation of sparks: Metal – e.g. a spoon in a glass – must be kept at least 2 cm from the cooking compartment walls and the inside of the door. Sparks can irreparably damage the glass on the inside of the door.

Cookware test

Never switch on the microwave unless there is food inside. The short cookware test is the only exception to this rule.

Perform the following test if you are unsure whether your cookware is suitable for use in the microwave.

1. Heat the empty cookware at maximum power for ½ to 1 minute.
2. Check the temperature of the cookware during this time.

The cookware should remain cold or warm to the touch. The cookware is unsuitable if it becomes hot or sparks are generated.
In this case, stop the test.

⚠ Warning – Risk of burns!
The accessible parts become very hot when in operation. Never touch hot parts. Keep children at a safe distance.

Microwave power settings

Use the button to set the desired microwave power.

90 W	For defrosting delicate foods
180 W	For defrosting and continued cooking
360 W	For cooking meat and heating delicate foods
600 W	For heating and cooking food
800 W	For heating liquids

Note: You can set the 800 W microwave power setting for 30 minutes, 600 W for 1 hour, the other power settings for 1 hour and 39 minutes respectively.

Setting the microwave

Example: Microwave power settings 600 watts, 5 minutes

1. Press the required microwave power setting.
   The indicator lamp above the button lights up.
2. Set a cooking time using the rotary selector.

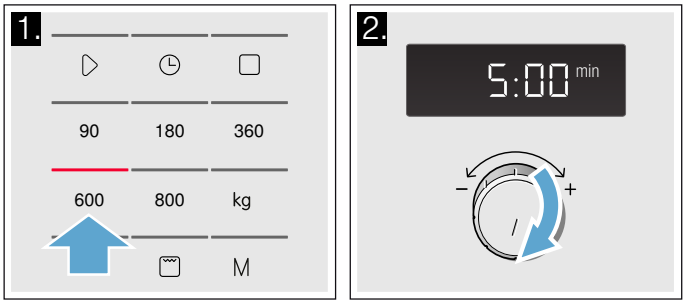

3. Press the ▷ button.

The cooking time counts down in the display.

The cooking time has elapsed

A signal sounds. Open the appliance door or press ☐ button. The clock reappears.

Changing the cooking time

This can be done at any time. Change the cooking time using the rotary selector.

Pausing

Press the ☐ button once or open the appliance door. Operation is suspended. The display above ▷ button flashes. After closing the door, press the ▷ button again.

Cancelling operation

Press the ☐ button twice or open the door and press the ☐ button once.

Note: You can also adjust the cooking time first and then the microwave power setting.

Grilling

The grill is perfect for gratinating and browning the top of dishes.

You can use the grill on its own or in combination with the microwave.

Setting the grill

1. Press the grill button ⌸.
   10:00 min appears in the display and the indicator lamp above the button lights up.
2. Set a cooking time using the rotary selector.

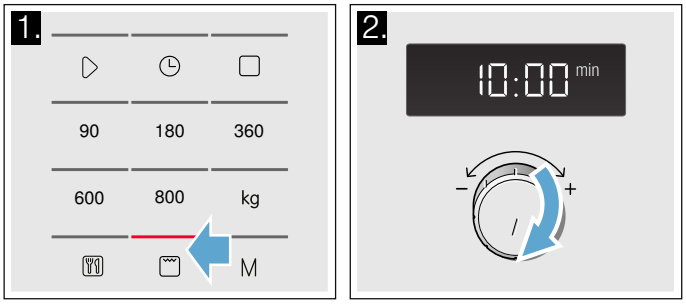

3. Press the ▷ button.

The cooking time counts down in the display.

The cooking time has elapsed

A signal sounds. Open the appliance door or press ☐ button. The clock reappears.

Changing the cooking time

This can be done at any time. Change the cooking time using the rotary selector.

Pausing

Press the ☐ button once or open the appliance door. Operation is suspended. The display above ▷ button flashes. After closing the door, press the ▷ button again.

Correction

You may correct a set cooking time at any time.

Cancelling operation

Press the ☐ button twice or open the door and press the ☐ button once.

Setting the microwave and grill

Example: 360 W, grill ⌸, 5 minutes

1. Press the required microwave power setting.
   1:00 min appears in the display and the indicator lamp above the button lights up.
2. Press the grill button ⌸.

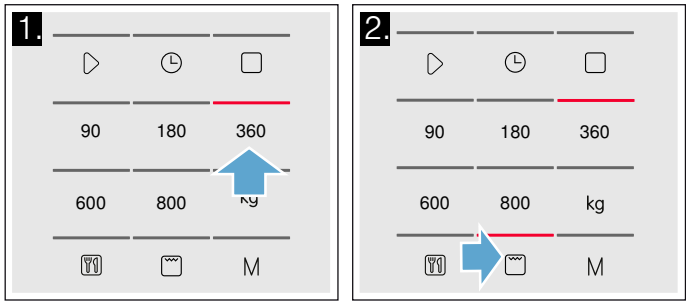

3. Set a cooking time using the rotary selector.

4. Press the ▷ button.

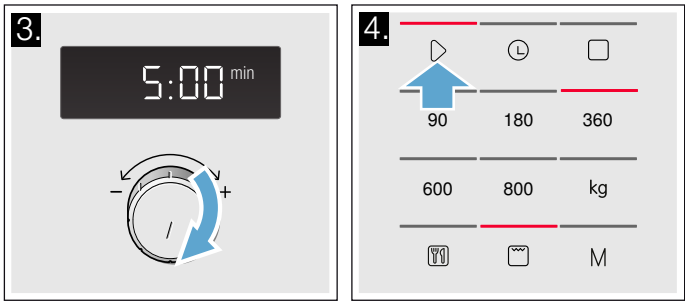

The cooking time counts down in the display.

M Memory

The memory function allows you to save the setting for a dish and call it up at any time.

The memory function is useful if you prepare one dish particularly frequently.

Saving memory settings

Example: 360 W, 25 minutes

1. Press the **M** button.
   The indicator lamp above the button lights up.
2. Press the required microwave power setting.
   1:00 min appears in the display and the indicator lamp above the button lights up.
3. Set the cooking time using the rotary selector.

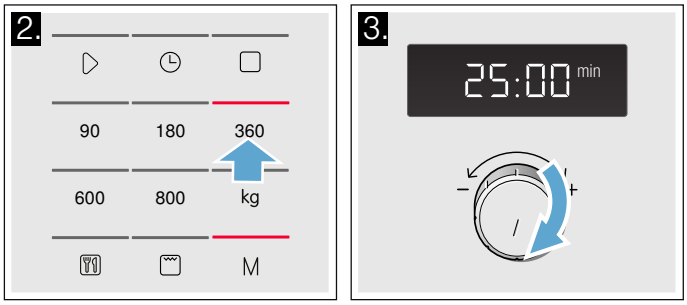

4. Confirm by pressing the **M** button.

The clock reappears. The setting has been saved.

Notes

- You can also store grill only or grill combined with microwave.
- You can save the memory settings and start the appliance immediately. When finishing, instead of pressing **M**, press ▷ button.
- You cannot save several microwave power settings one after the other.
- You cannot save automatic programmes.

Adding to the memory

1. Press the **M** button.
   The old settings appear.
2. Save the new programme as described in steps 1 to 4.

Starting the memory

It is very easy to start the saved programme. Place your meal into the appliance. Close the appliance door.

1. Press the **M** button.
   The saved settings are displayed.
2. Press the ▷ button.

The cooking time counts down in the display.

The cooking time has elapsed

A signal sounds. Open the appliance door or press ☐ button. The clock reappears.

Pausing

Press the ☐ button once or open the appliance door. Operation is suspended. The display above ▷ button flashes. After closing the door, press the ▷ button again.

Cancelling operation

Press the ☐ button twice or open the door and press the ☐ button once.

Programmes

You can prepare food really easily using the various programmes. You select a programme and enter the weight of your food. The program then applies the most suitable settings.

Note: You can choose from 8 programmes.

Setting a programme

Once you have selected a programme, make settings as follows:

1. Press the button repeatedly until the required programme number appears.
   The indicator lamp above the button lights up.
2. Press the kg button.
   A suggested weight appears in the display and the indicator lamp above the button lights up.

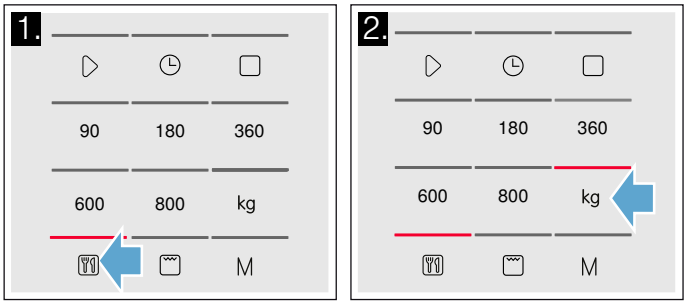

3. Turn the rotary selector to specify the weight of the dish.
4. Press the ▷ button.

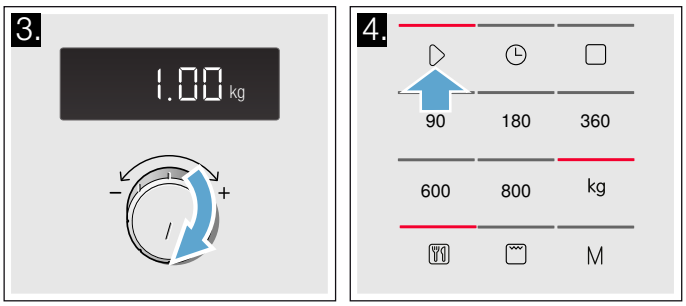

You will see the cooking time for the programme counting down.

The cooking time has elapsed

A signal sounds. Open the appliance door or press ☐ button. The clock reappears.

Correction

Press the ☐ button twice and reset.

Pausing

Press the ☐ button once or open the appliance door. Operation is suspended. The display above ▷ button flashes. After closing the door, press the ▷ button again.

Cancelling operation

Press the ☐ button twice or open the door and press the ☐ button once.

Notes

- For some programmes, a signal sounds after a certain time. Open the appliance door and stir the food or turn the meat or poultry. After closing the door, press the ▷ button again.
- You can query the programme number and weight using or kg. The queried value is shown for 3 seconds in the display.

Defrosting using the automatic programmes

You can use the 4 defrosting programmes to defrost meat, poultry and bread.

Notes

- **Preparing food**
  Use food that has been frozen at -18 °C and stored in portion-sized quantities that are as thin as possible. Take the food to be defrosted out of all packaging and weigh it. You need to know the weight to set the programme.
- Liquid will be produced when defrosting meat or poultry. Drain off this liquid when turning meat and poultry and under no circumstances use it for other purposes or allow it to come into contact with other foods.
- **Ovenware**
  Place the food in a microwaveable shallow dish, e.g. a china or glass plate, but do not cover.
- **Resting time**
  The defrosted food should be left to stand for an additional 10 to 30 minutes until it reaches an even temperature. Large pieces of meat require a longer standing time than smaller pieces. Flat pieces of meat and items made from minced meat should be separated from each other before leaving to stand. After this time, you can continue to prepare the food, even though thick pieces of meat may still be frozen in the middle. The giblets can be removed from poultry at this point.
- **Signal**
  For some programmes, a signal sounds after a certain time. Open the appliance door and separate the food out or turn the meat or poultry. Close the door and press the ▷ button.

Programme no.		Cook-ware	Weight range in kg
	Defrosting		
P 01	Minced meat	Open	0.20 - 1.00
P 02	Pieces of meat	Open	0.20 - 1.00
P 03	Chicken, chicken pieces	Open	0.40 - 1.80
P 04	Bread	Open	0.20 - 1.00

Cooking with the automatic programmes

With the 3 cooking programmes, you can cook rice, potatoes or vegetables.

Notes

- **Ovenware**
  The food must be cooked in microwaveable cookware with a lid. For rice, you should use a large, deep dish.
- **Preparing food**
  Weigh out the food. You need to know the weight to set the programme.
  Rice:
  Do not use boil-in-the-bag rice. Add the required amount of water, as specified on the packaging. This is usually two or three times the quantity of rice.
  Potatoes:
  For boiled potatoes, cut the fresh potatoes into small, even-sized pieces. Add one tablespoon of water for each 100 g boiled potatoes, and a little salt.
  Fresh vegetables:
  Weigh out the fresh, trimmed vegetables. Cut the vegetables into small, even-sized pieces. Add a tbsp water for each 100 g vegetables.
- **Signal**
  While the programme is running, a signal sounds after some time. Stir the food.
- **Resting time**
  Once the programme has finished, stir the food again. You should leave it to stand for another 5 to 10 minutes until it reaches an even temperature.
  The cooking result will depend on the quality and consistency of the food.

Programme no.		Cookware	Weight range in kg
	Cooking		
P 05	Rice	With lid	0.05 - 0.2
P 06	Potatoes	With lid	0.15 - 1.0
P 07	Vegetables	With lid	0.15 - 1.0

Combi-cooking programme

Notes

- **Ovenware**
  Cook the food in ovenware which is not too big, and is heat resistant and microwaveable.
- **Preparing food**
  Take the food out of its packaging and weigh it. If it is not possible to enter the exact weight, you should round it up or down.
- **Resting time**
  Once the programme has finished, allow the food to rest for another 5 to 10 minutes so it reaches an even temperature.

Programme no.		Cookware	Weight range in kg
	Combi programme		
P 08	Frozen bake, up to 3 cm deep	Open	0.4 - 0.9

Cleaning

With good care and cleaning, your appliance will retain its appearance and remain fully functioning for a long time to come. We will explain here how you should correctly care for and clean your appliance.

⚠ Warning – Risk of burns!
The appliance becomes very hot. Never clean the appliance immediately after switching it off. Allow the appliance to cool down.

⚠ Warning – Risk of electric shock!
Do not use any high-pressure cleaners or steam cleaners, which can result in an electric shock.

⚠ Warning – Risk of injury!
Scratched glass in the appliance door may develop into a crack. Do not use a glass scraper, sharp or abrasive cleaning aids or detergents.

⚠ Warning – Risk of serious harm to health!
The surface of the appliance may become damaged if it is not cleaned properly. Microwave energy may escape. Clean the appliance on a regular basis, and remove any food remnants immediately.⟶ "Cleaning agent" on page 14

⚠ Warning – Risk of electric shock!
Do not immerse the appliance in water or clean under a jet of water.

Note: Unpleasant odours, for example after fish has been prepared, can be removed very easily. Add a few drops of lemon juice to a cup of water. Always place a spoon in the container to prevent delayed boiling. Heat the water for 1 to 2 minutes at maximum microwave output.

Cleaning agent

To ensure that the different surfaces are not damaged by using the wrong cleaning agent, observe the information in the table.

Do not use:

- Harsh or abrasive cleaning agents.
- Metal or glass scrapers to clean the door panels.
- Metal or glass scrapers to clean the door seal.
- Hard scouring pads or sponges.
- Cleaning agents with a high alcohol content.

Wash new sponge cloths thoroughly before use.

Area	Cleaning product
Appliance front	Hot soapy water: Clean using a dish cloth and then dry with a soft cloth. Do not use metal or glass scrapers for cleaning.
Appliance front with stainless steel	Hot soapy water: Clean using a dish cloth and then dry with a soft cloth. Remove splashes and patches of limescale, grease, starch and albumin (e.g. egg white) immediately. Corrosion can form under these patches or splashes. Special stainless-steel cleaning products are available from the after-sales service or from specialist retailers. Do not use glass cleaners or metal or glass scrapers for cleaning.
Cooking compartment made of stainless steel	Hot soapy water or vinegar solution: Clean using a dish cloth and then dry with a soft cloth.Do not use oven spray or any other aggressive oven cleaners or abrasive materials. Scouring pads, rough sponges and pan cleaners are also unsuitable. These items scratch the surface. Allow the interior surfaces to dry completely.
Recess in the cooking compartment	Damp cloth: Water must not be allowed to run into the appliance through the turntable drive. Dry the turntable drive with a cloth.
Turntable and roller ring	Hot soapy water: When placing the turntable back into its recess, it must engage properly.
Wire rack	Hot soapy water: Soak and clean with a dish cloth or brush. Do not scour.Do not use metal or glass scrapers for cleaning.
Door panels	Glass cleaner: Clean with a dish cloth. Do not use glass scrapers.

Basic settings

Your appliance has basic settings that you can change to suit your needs.

Setting		Options	
1	Button tone	On*	Switched on
		OFF	Switched off Button tone (will remain active for the ▷ and ☐ buttons)
2	Demo mode	dEO	The appliance is switched off. You can use the buttons and the display, but the buttons will not activate any function on the appliance (i.e. the microwave has no power). Demo mode is mainly used by dealers.

* Factory setting (factory settings may vary depending on the appliance model)

You can change the button tone on your appliance if you wish.

Changing the button tone

The appliance must be switched off when you do this.

1. Press and hold the ▷ and ☐ buttons at the same time for a couple of seconds.
   1 will appear in the display.
2. Touch the ▷ button.
   On will start flashing in the display.
3. Turn the rotary selector to OFF.
4. Touch the ▷ button.
   The setting has been applied.
5. Touch the ☐ button.

The button tone has been switched off.
You can change this setting at any time.

Trouble shooting

If a fault occurs, there is often a simple explanation. Before calling the after-sales service, please refer to the fault table and attempt to correct the fault yourself.

Tip: If a dish does not turn out exactly as you wanted, refer to the following chapter, where you will find lots of tips and notes relating to the optimum settings.⟶ "Tested for you in our cooking studio" on page 18

⚠ Warning – Risk of electric shock!
Incorrect repairs are dangerous. Repairs may only be carried out and damaged power cables replaced by one of our trained after-sales technicians. If the appliance is defective, unplug the appliance from the mains or switch off the circuit breaker in the fuse box. Contact the after-sales service.

Fault table

Fault	Possible cause	Remedy/information
The appliance is not working	The plug is not plugged into the mains	Connect the appliance to the electricity supply
	Power failure	Check whether other kitchen appliances are working
	The circuit breaker/fuse is faulty	Check in the fuse box to make sure that the circuit breaker/fuse for the appliance is in working order
	Faulty operation	Switch off the circuit breaker/fuse for the appliance in the fuse box and switch it back on after approximately 10 seconds
Three zeros are lit on the display.	Power failure	Reset the time.
The appliance is not operating. A cooking time is shown on the display.	The rotary selector has been accidentally turned.	Press the ☐ button.
	The ▷ button has not been pressed after the setting was applied.	Press the ▷ button or cancel the setting by pressing the ☐ button.
The microwave is not working.	The door has not been properly closed.	Check whether food remnants or debris is/are trapped in the door.
	The ▷ button has not been pressed.	Press the ▷ button.
It is taking longer than usual for food to heat up	The microwave power output has been set too low.	Select a higher microwave power setting.
	A larger amount of food than usual has been placed in the appliance.	Double the amount – double the time.
	The food was colder than usual.	Stir or turn the food during heating.
The turntable is making a scraping or grinding noise.	Dirt or debris in the area around the turntable drive.	Clean the roller ring and the recess in the cooking compartment.
The microwave has stopped for no apparent reason.	The microwave has a fault.	If this fault recurs, please call the after-sales service.
An **M** is shown on the display.	The appliance is in demo mode	Deactivate demo mode. ⟶ "Basic settings" on page 15
Error message "E - 3"	Fault in automatic door opening system.	If an error message is displayed, switch the appliance off and on again; if the message disappears, it was a one-off problem. If the fault occurs again or the error message is still displayed, please contact the after-sales service and provide the fault code.

Customer service

Our after-sales service is there for you if your appliance needs to be repaired. We will always find an appropriate solution, also in order to avoid after-sales personnel having to make unnecessary visits.

E number and FD number

When calling us, please quote the full product number (E no.) and the production number (FD no.) so that we can provide you with the correct advice. The rating plate bearing these numbers can be found on the right-hand side when you open the cooking compartment door.

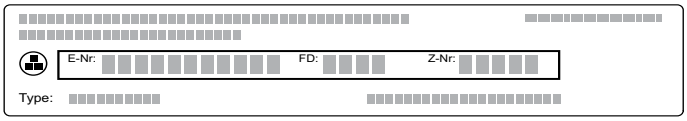

To save time, you can make a note of the numbers for your appliance and the telephone number of the after-sales service in the space below in case you need them.

E no.		**FD no.**	
After-sales service ☏			

Please note that a visit from an after-sales service engineer is not free of charge in the event that the appliance has been misused, even during the warranty period.

Please find the contact data of all countries in the enclosed customer service list.

To book an engineer visit and product advice
CN 400 885 5888
Call rates depend on the network used.

Rely on the professionalism of the manufacturer. You can therefore be sure that the repair is carried out by trained service technicians who carry original spare parts for your appliances.

This appliance corresponds to the standards EN 55011 and CISPR 11. It is a Group 2, Class B product.

Group 2 means that microwaves are produced for the purpose of heating food. Class B states that the appliance is suitable for private households.

Manufacturer Info:
Manufacturer: Bosch Household Appliances (China) Co., Ltd.
Address: Zhongshan Road, Nanjing, Jiangsu Province, South China International Building, 20,21 floor

Executive Standard:
GB 4706.1-2005
Safety of household and similar electrical appliances - Part 1: General requirements
GB 4706.21-2008
Safety of household and similar electrical appliances Microwave ovens, including the special requirements of combined microwave ovens
GB 4706.22-2008
Safety of household and similar electrical appliances Particular requirements for standing electric hobs, hobs, ovens and similar appliances
GB 24849-2010
Household and similar use microwave ovens energy efficiency limit and rating
GB19606-2004
Household and similar electrical noise limits

Technical specifications

Input voltage	220 V AC, 50 Hz
Power consumption	1270 W
Max. output power	800 W
Max. grill output power	1000 W
Microwave frequency	2450 MHz
Circuit breaker/fuse rating	10 A
Noise	57 dB
Energy efficiency rating	1 level
Dimensions (H/W/D)	
- Appliance	382 x 594 x 317 mm
- Cooking compartment	201 x 308 x 282 mm
VDE approved	Yes
CE mark	Yes

Tested for you in our cooking studio

In the table below, you will find a selection of dishes and the ideal settings for them. It tells you which microwave power setting is best suited to your dish. You can use the microwave on its own or in combination with the grill. We have listed some tips with regard to cookware and preparation methods.

Notes

- The times specified in the tables are intended as a guide only.They will depend on the quality and composition of the food.
- Time ranges are often specified in the tables. Set the shortest time to begin with, and then extend the time if necessary.
- Always use an oven cloth or oven gloves when taking hot cookware out of the cooking compartment.

It may be that you have different quantities from those specified in the tables. There is a rule of thumb for operating the microwave: Double the amount = almost double the time, half the amount = half the time.

Always place the cookware on the turntable.

The following tables provide you with numerous options and settings for the microwave.

Suitable ovenware

Suitable dishes are heat-resistant ovenware made of glass, glass ceramic, porcelain, ceramic or heat-resistant plastic. These materials allow microwaves to pass through.

You can also use serving dishes. This saves you having to transfer food from one dish to another. You should only use ovenware with decorative gold or silver trim if the manufacturer guarantees that they are suitable for use in microwaves.

Unsuitable cookware

Metal cookware is unsuitable. Metal does not allow microwaves to pass through. Food in covered metal containers will remain cold.

Caution!

Sparks: Metal, e.g. a spoon in a glass, must be kept at least 2 cm from the oven walls and the inside of the door. Sparks could irreparably damage the glass on the inside of the door.

Defrosting

Place the frozen food in an open container on the turntable.

Delicate parts such as the legs and wings of chicken or fatty outer layers of roasts can be covered with small pieces of aluminium foil. The foil must not touch the sides of the cooking compartment. You can remove the foil half way through the defrosting time.

Liquid will be produced when defrosting meat or poultry. Drain off this liquid when turning meat and poultry and under no circumstances use it for other purposes or allow it to come into contact with other foods.

Turn or stir the food once or twice during the defrosting time. Large pieces of food should be turned several times.

Leave defrosted items to stand at room temperature for a further 10 to 20 minutes so that the temperature can even out. The giblets can be removed from poultry at this point. The meat can also be processed further when a small part of the core is frozen.

Tips for defrosting

The time has elapsed but the food is not defrosted, hot or cooked.	Set a longer time. Large quantities and food which is piled high require longer times.
Time has elapsed but the food is overheated at the edge and not done in the middle.	Stir it during the cooking time and next time, select a lower microwave power setting and a longer cooking time.
After defrosting, the poultry or meat is defrosted on the outside but not defrosted in the middle.	Next time, select a lower microwave power setting. If you are defrosting a large quantity, turn it several times.

Defrosting	Weight	Microwave power setting in watts	Cooking time in minutes	Notes
Whole pieces of beef, veal or pork (on the bone or boned)	800 g	180 90	15 10-20	-
	1 kg	180 90	20 15-25	
	1.5 kg	180 90	30 20-30	
Meat in pieces or slices of beef, veal or pork	200 g	180 90	2 4-6	Separate any defrosted parts when turning
	500 g	180 90	5 5-10	
	800 g	180 90	8 10-15	

Defrosting	Weight	Microwave power setting in watts	Cooking time in minutes	Notes
Minced meat, mixed	200 g	90	10	Freeze food flat if possible Turn several times, remove any defrosted meat
	500 g	180 90	5 10-15	
	800 g	180 90	8 10-20	
Poultry or poultry portions	600 g	180 90	8 10-20	Separate any defrosted parts
	1.2 kg	180 90	15 10-20	
Fish fillet, fish steak or slices	400 g	180 90	5 10-15	Separate any defrosted parts
Vegetables, e.g. peas	300 g	180	10-15	-
Fruit, e.g. raspberries	300 g	180	7-10	Stir carefully during defrosting and separate any defrosted parts
	500 g	180 90	8 5-10	
Butter, defrosting	125 g	180 90	1 2-3	Remove all packaging
	250 g	180 90	1 3-4	
Loaf of bread	500 g	180 90	6 5-10	-
	1 kg	180 90	12 10-20	
Cakes, dry, e.g. sponge cake	500 g	90	10-15	Only for cakes without icing, cream or crème pâtissière, separate the pieces of cake.
	750 g	180 90	5 10-15	
Cakes, moist, e.g. fruit flan, cheesecake	500 g	180 90	5 15-20	Only for cakes without icing, cream or gelatine
	750 g	180 90	7 15--20	

Heating frozen food

Notes

- Take ready meals out of the packaging. They will heat up more quickly and evenly in microwaveable cookware. The different components of the meal may not require the same amount of time to heat up.
- Food which lies flat will cook more quickly than food which is piled high. You should therefore distribute the food so that it is as flat as possible in the cookware. Food should not be placed in layers on top of one another.
- Always cover the food. If you do not have a suitable cover for your cookware, use a plate or special microwave foil.
- Stir or turn the food 2 or 3 times during cooking.
- After heating, allow the food to stand for a further 2 to 5 minutes to allow the temperature to even out.
- Always use an oven cloth or oven gloves when removing cookware from the appliance.

Heating frozen food	Weight	Microwave power settings in watts	Cooking time in minutes	Notes
Menu, plated meal, ready meal (2-3 components)	300-400 g	600	8-11	-
Soup	400 g	600	8-10	-
Stew	500 g	600	10--13	-
Slices or pieces of meat in sauce, e.g. goulash	500 g	600	12-17	Separate the pieces of meat when stirring
Bakes, e.g. lasagne, cannelloni	450 g	600	10-15	-

Heating frozen food	Weight	Microwave power settings in watts	Cooking time in minutes	Notes
Side dishes, e.g. rice, pasta	250 g	600	2-5	Add a little liquid
	500 g	600	8-10	
Vegetables, e.g. peas, broccoli, carrots	300 g	600	8-10	Pour water into the dish so that it covers the base
	600 g	600	14-17	
Creamed spinach	450 g	600	11-16	Cook without additional water

Heating food

Caution!

Metal, e.g. a spoon in a glass, must be kept at least 2 cm from the oven walls and the inside of the door. Sparks could irreparably damage the glass on the inside of the door.

Notes

- Take ready meals out of the packaging. They will heat up more quickly and evenly in microwaveable cookware. The different components of the meal may not require the same amount of time to heat up.
- Always cover the food. If you do not have a dedicated lid for your cookware, use a plate or special microwave film.
- Stir or turn the food several times during the heating time. Check the temperature.
- After heating, allow the food to stand for a further 2 to 5 minutes to allow the temperature to even out.
- Always use an oven cloth or oven gloves when removing cookware from the appliance.

⚠ Warning – Risk of scalding!

There is a possibility of delayed boiling when a liquid is heated. This means that the liquid reaches boiling temperature without the usual steam bubbles rising to the surface. Even if the container only vibrates a little, the hot liquid may suddenly boil over and spatter. When heating, always place a spoon in the container. This will prevent delayed boiling.

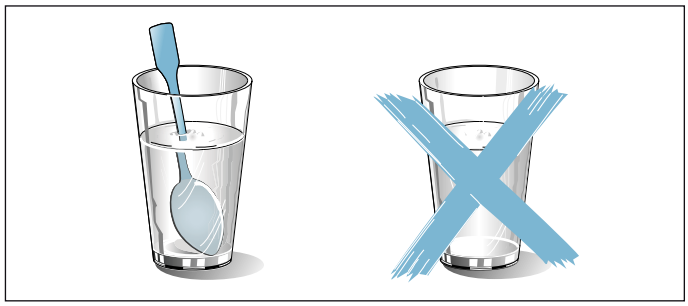

Heat up dishes	Weight	Microwave output in watts	Cooking time in minutes	Notes
Beverages	200 ml	800	2-3	Place a spoon in the glass; do not overheat alcoholic drinks; check occasionally while heating
	500 ml	800	3-4	
Baby food, e.g. baby bottles	50 ml	360	Approx. ½	No teats or lids. Always shake well after heating. You must check the temperature!
	100 ml	360	Approx. 1	
	200 ml	360	1½	
Soup, 1 cup	200 g	600	2-3	-
Soup, 2 cups	400 g	600	4-5	-
Menu, plated meal, ready meal (2-3 components)	350-500 g	600	4-8	-
Meat in sauce	500 g	600	8-11	Separate the slices of meat
Stew	400 g	600	6-8	-
	800 g	600	8-11	-
Vegetables, 1 portion	150 g	600	2-3	Add a little liquid
Vegetables, 2 portions	300 g	600	3-5	

Cooking food

Food which lies flat will cook more quickly than food which is piled high. You should therefore distribute the food so that it is as flat as possible in the cookware. Food should not be placed in layers on top of one another.

Cook the food on its own in the microwave – always use with a lid on the cookware. Place the cookware directly on the turntable. If you do not have a suitable lid for your cookware, use a plate or special microwave foil.

This will help the food retain its flavour. This means that you can use salt and seasonings sparingly.

After cooking, allow the food to stand for a further 2 to 5 minutes to allow the temperature to even out.

Always use an oven cloth or oven gloves when removing cookware from the appliance.

Grilling:
Always grill on the wire rack with the cooking compartment door closed and do not preheat.

Always place the wire rack on the turntable.

Combined microwave and grill:
Combi mode is especially suitable for bakes and gratins.

Always place the cookware on the turntable and do not cover the food.

Use a deep dish when roasting. This will help keep the cooking compartment clean.

Use large shallow cookware for bakes and gratins. Food takes longer to cook in narrow, deep containers and browns more on top.

Check that your cookware fits in the cooking compartment. It must not be too big, the turntable must still be able to turn.

Always set the maximum cooking time. Check the food after the shorter time specified.

Leave the meat to rest for another 5-10 minutes before carving it. This allows the meat juices to be distributed evenly so that they do not run out when the meat is carved.

Bakes and gratins should be left to cook in the appliance for a further 5 minutes after the appliance has been switched off.

All the values given in the table are guidelines and can vary depending on the properties of your food.

Cooking food	Accessories	Microwave power setting in watts	Cooking time in minutes	Notes
Chicken, whole, 1.2 kg	Cookware with lid	600	25-30	Turn half way through the time
Chicken portions, e.g. chicken quarters, 800 g	Cookware without lid, wire rack	360 W +	30-40	Place with the skin side up, do not turn
Chicken wings, marinated frozen, 800 g	Cookware without lid, wire rack	360 W +	15-25	Do not turn
Pork without rind approx. 750 g, e.g. neck	Cookware without lid	360 W +	40-50	Turn once or twice
Bacon rashers, approx. 8 rashers	Wire rack	180 W +	10-15	-
Meat loaf, 750 g	Cookware without lid	600 360 W +	20-25 25-35	Cook without a lid Maximum 6 cm deep
Fish, e.g. fillet steaks, 400 g	Cookware without lid	600	10-15	Add water, lemon juice or wine as desired
Fish fillet, au gratin, approx. 400 g	Cookware without lid	360 W +	10-15	Defrost frozen fish before cooking
Fish kebabs, 4-5 pieces	Wire rack	180 W +	10-15	Use wooden skewers
Sweet bakes, e.g. quark and fruit soufflé, 1 kg	Cookware without lid	360 W +	30-35	Maximum 5 cm deep
Savoury bakes made from raw ingredients, e.g. pasta bake, 1 kg	Cookware without lid	360 W +	30-35	Sprinkle with cheese, maximum 5 cm deep
Savoury bakes made from cooked ingredients, e.g. potato gratin, 1 kg	Cookware without lid	360 W +	30-40	Maximum 4 cm deep
Soup au gratin, e.g. onion soup, 2-4 cups	Cookware without lid		approx. 15-20	-
Vegetables, fresh, 250 g	Cookware with lid	600	5-10	Cut the vegetables into pieces of equal size; Add 1 to 2 tbsp water per 100 g of vegetables; Stir during cooking
Vegetables, fresh, 500 g	Cookware with lid	600	10-15	-
Vegetable kebabs, 4-5 pieces	Wire rack	180 W +	15-20	Use wooden skewers

Cooking food	Accessories	Microwave power setting in watts	Cooking time in minutes	Notes
Potatoes, 250 g	Cookware with lid	600	8-10	Cut the potatoes into pieces of equal size; Add 1 to 2 tbsp water for every 100 g; Stir during cooking
Potatoes, 500 g	Cookware with lid	600	11-14	
Potatoes, 750 g	Cookware with lid	600	15-22	
Rice, 125 g	Cookware with lid	800 180	5-7 12-15	Add double the amount of liquid
Rice, 250 g	Cookware with lid	800 180	6-8 15-18	
Bread (pre-toasting), 2-4 slices	Wire rack		1st side: Approx. 2-4 2nd side: Approx. 2-4	-
Toast with topping, 2-6 slices	Wire rack		7-10	Depending on topping
Fruit, compote, 500 g	Cookware with lid	600	9-12	-
Sweet foods, e.g. blancmange (instant) 500 ml	Cookware with lid	600	6-8	Stir the blancmange thoroughly 2 to 3 times during cooking using an egg whisk

Microwave tips

You cannot find any information about the settings for the quantity of food you have prepared.	Increase or reduce the cooking times using the following rule of thumb: Double the amount = almost double the cooking time Half the amount = half the cooking time
The food has become too dry.	Next time, set a shorter cooking time or select a lower microwave power setting. Cover the food and add more liquid.
When the time has elapsed, the food is not defrosted, hot or cooked.	Set a longer time. Large quantities and food which is piled high require longer times.
When the time has elapsed, the food is overheated at the edge but not done in the middle.	Stir it during the cooking time and next time, select a lower microwave power setting and a longer cooking time.
After defrosting, the poultry or meat is defrosted on the outside but not defrosted in the middle.	Next time, select a lower microwave power setting. If you are defrosting a large quantity, turn it several times.

Condensation

Condensation may appear on the door window, interior walls and floor. This is normal. This does not affect how the microwave operates. Wipe away the condensation after cooking.

Test dishes

In accordance with EN 60705:2012, IEC 60705:2010 and EN 60350-1:2013 or IEC 60350-1:2011

These tables have been produced for test institutes to facilitate the inspection of the appliance.

Microwave cooking

Dish	Microwave power output in watts, cooking time in minutes	Note
Custard, 750 g	360 W, 12-17 mins + 90 W, 20-25 mins	Place a 20 x 25 cm Pyrex dish onto the turntable.
Sponge	600 W, 8-10 mins	Place a 22 cm Pyrex dish onto the turntable.
Meat loaf	600 W, 20-25 mins	Place a Pyrex dish onto the turntable.

Microwave defrosting

Dish	Microwave power output in watts, cooking time in minutes	Note
Meat	180 W, 5-7 mins + 90 W, 10-15 mins	Place a 22 cm Pyrex dish onto the turntable.

Combined microwave cooking

Dish	Microwave power setting in watts, cooking time in minutes	Note
Potato gratin	grill + 360 W, 35-40 mins	Place a pyrex dish with a diameter of 22 cm on the turntable.

目录

主要用途 25

重要安全信息 25
常规信息 25
微波 26

安装和连接 27

损坏原因 27

环境保护 27
环保处理 27

了解您的电器 27
控制面板 27
控制按键 27
更改信号持续时间 28

附件 28
专用附件 28

首次使用之前 29
清洁烹饪箱并将转盘放置到位 29
设置时钟 29
加热烹饪箱 29

微波 29
烹饪容器 29
微波功率设置 30
设置微波 30

烧烤 30
设置烧烤 30
设置微波和烧烤 30

记忆 31
保存存储器设置 31
启动存储器 31

程序 32
设置程序 32
使用自动程序解冻 32
使用自动程序烹饪 32
组合烹饪程序 33

清洁 33
清洁剂 33

基本设置 34

故障检修 34

客户服务 35
E 编号和 FD 编号 35
技术参数 35

经由我们烹饪工作室测试过的菜谱 36
适用烹饪容器 36
不适合的烹饪容器 36
除霜 36
加热冷冻食物 37
加热食物 37
烹饪食物 38
微波使用技巧 39

测试菜谱 40

关于产品、附件、更换部件以及服务的更多信息请参见 **www.bosch-home.com** 和在线商店 **www.bosch-eshop.com**

主要用途

请认真阅读本手册。只有这样才能安全正确地使用电器。请保管好说明手册和安装说明，以备日后使用或供下一任所有者使用。

本电器仅适合整体安装在厨房内。请遵守专用的安装说明。

拆开包装后请检查电器是否有损坏。如果电器在运输过程中损坏，请勿连接电器。

仅限持有上岗证书的专业人员才可以连接不带插头的电器。因不正确连接导致的损坏将不予保修。

本电器仅供家庭使用。本电器只能用于制备食物和饮料。电器工作时必须有人看管。本电器仅限室内使用。

本电器最高可在海拔 4000 米的高度使用。

8 岁以上儿童以及身体、感官或精神有缺陷的人员或缺乏相关经验和知识的人员，必须在有人监督的情况下或在其安全责任人给予电器使用安全指导并了解相关危险的情况下，方可使用本电器。

严禁儿童玩耍本电器及在电器周围玩耍。儿童除非年满 15 岁并有人监督，否则不得清洁本电器或执行一般维护操作。

8 岁以下儿童请远离本电器和电源线。

必须将附件正确放到烹饪箱中。⟶ "首次使用之前"第 29 页

重要安全信息

常规信息

⚠ 警告 – 有着火危险!

- 易燃物品保存在烹饪箱中可能导致着火危险。切勿将易燃的物品保存在烹饪箱中。切勿在内部起烟时打开电器门。关断电器，拔下电源插头，或关断熔断器盒中的断路器。
- 电器会变灼热。如果电器安装在有装饰门的固定橱柜中，装饰门关闭时会聚集热量。只能在装饰门打开时才能操作电器。

⚠ 警告 – 有电击危险!

- 为避免可能出现的电击，换灯前应确定器具已断开电源。
- 修理不当是很危险的。只能由我们经过培训的售后服务人员来维修电器和更换损坏的电源线。如果电器发生故障，请拔下电器电源插头，或断开熔断器盒中的断路器。联系售后服务部门。
- 如果接触到电器的灼热部件，电器的电线绝缘层会熔化。切勿使电器电源线接触电器的灼热部件。
- 请勿使用高压清洁器或蒸汽清洁器，以防触电。
- 湿气渗入会导致电击危险。切勿让电器处于过热或潮湿的环境中。本电器仅限室内使用。
- 故障电器会导致电击危险。切勿接通发生故障的电器。拔下电器的电源插头或断开保险丝盒中的断路器。联系售后服务部门。
- 本电器为高压电器。切勿拆除外壳。

⚠ 警告 – 有灼伤危险! !

- 电器会变灼热。切勿触摸烹饪箱的内表面或加热元件。必须让电器冷却下来。请将小孩留在安全距离以外。
- 附件和烹饪容器会变得十分灼热。从烹饪箱中取出附件或烹饪容器时必须戴上烤箱手套。
- 酒精蒸汽可能会在热烹饪箱内着火。切勿烹饪混合了大量高浓度酒类的食物。只能使用少量高浓度酒类。打开电器门时需小心。

⚠ 警告 – 有烫伤危险!

- 在打开电器门时，可能会有热蒸汽逸出。打开电器门时需小心。请将小孩留在安全距离以外。
- 将水倒入高温烹饪箱会产生热蒸汽。切勿将水倒入高温烹饪箱中。

⚠ 警告 – 有受伤危险!

电器门玻璃如果有刮伤，可能会导致裂开。请不要使用玻璃刮刀、剧烈或腐蚀性的清洁用品或洗涤剂。

微波

⚠ 警告 – 有着火危险!

- 将本电器用于预定用途以外的其他目的非常危险，可能导致损坏。
  不允许以下行为：烘干食物或衣物，加热拖鞋或谷物枕头、海绵、湿的清洁布或类似物品。
  例如，加热的拖鞋和谷物或荞麦枕可能会着火，火灾甚至会在几小时以后发生。本电器只能用于制备食物和饮品。
- 食物可能着火。切勿在蓄热包装内加热食物。
  在无人看管的情况下，请勿将食物放在塑料、纸或其它易燃材料制成的容器中加热。
  所选择的微波功率或时间设置不要高于实际需要。请遵循本说明手册中提供的信息。
  切勿使用微波干燥食物。
  解冻或加热含水量低的食物。如面包时，切勿选择过高的功率或过长的时间。
- 食用油有着火危险。切勿使用微波单独加热食用油。

⚠ 警告 – 有爆炸危险!

将液体或其它食物放在密封的容器中有爆炸危险。切勿将饮品或其它食物放在密封的容器中加热。

⚠ 警告 – 有灼伤危险! !

- 带壳或带皮的食物在加热过程中或甚至在加热后都有可能爆裂或爆炸。切勿加热带壳的鸡蛋或重新加热白煮蛋。切勿烹饪贝类或甲壳类。
  在煎蛋或水煮蛋时，一定要刺破蛋黄。带壳或带皮的食物表皮会爆裂，如苹果、番茄、土豆和香肠。加热前，应先刺破表壳或表皮。
- 婴儿食品中热量分布不均。切勿在封闭的容器中加热婴儿食品。一定要取下盖子或奶嘴。食物经过加热后，要搅拌或摇晃均匀。在喂孩子食物之前要先检查食物的温度。
- 经过加热的食物会散发热量。烹饪容器会变热。从烹饪箱中取出烹饪容器或附件时必须戴上烤箱手套。
- 给食物加热时，密封的包装可能会爆炸。请遵守产品包装上的说明。将容器从烹饪箱中取出时一定要戴上烤箱手套。
- 可触及部件在电器运转时会变得灼热。切勿触碰灼热部件。请将小孩留在安全距离以外。
- 将本电器用于预定用途以外的其他目的非常危险。
  不允许以下行为：烘干食物或衣物，加热拖鞋或谷物枕头、海绵、湿的清洁布或类似物品。
  这是因为过热的拖鞋、谷物枕头、海绵、湿的清洁布等类似物品可能导致烧伤皮肤。

⚠ 警告 – 有烫伤危险!

- 加热的液体有可能延时沸腾。即液体达到沸腾温度后，却没有常见的蒸汽气泡冒上液面。即使容器只是稍微振动，滚烫的液体也会突然沸腾溢出和飞溅。在加热时，一定要在容器内放一把汤匙。这会防止延时沸腾。

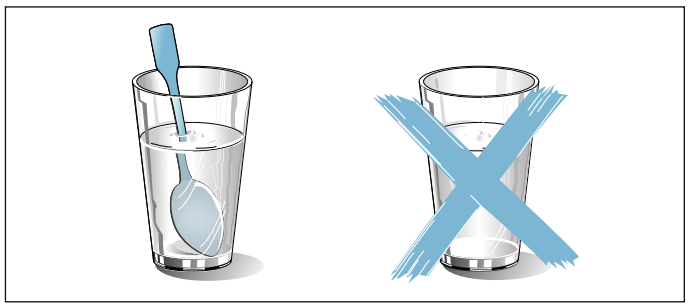

⚠ 警告 – 有受伤危险!

- 电器门玻璃如果有刮伤，可能会导致裂开。请不要使用玻璃刮刀、剧烈或腐蚀性的清洁用品或洗涤剂。
- 不合适的烹饪容器可能会开裂。瓷质或陶质烹饪容器在手柄或盖上会有小孔。这些小孔下方隐藏着空穴。渗入这些空穴的液体可能导致烹饪容器破裂。仅限使用耐微波烹饪容器。
- 若本电器仅在微波模式下运作，使用金属或含金属装饰的容器会导致电火花。这可能会导致电器损坏。在仅有微波运作的情况下切勿使用金属容器。
- 使用不适当的烹饪容器可能会导致损坏。对于微波组合模式，务必使用由合适材料制成同时又能承受热风和烧烤模式温度的烹饪容器。
- 玻璃转台可能破裂。不得使硬物撞击转台。
- 玻璃转台中的裂纹或裂口非常危险。处理转台时务必小心。

⚠ 警告 – 有电击危险!

本电器为高压电器。切勿拆除外壳。

⚠ 警告 – 有严重损害健康的危险!

- 如果清洁不当，电器表面可能会损坏。微波能可能会逸出。定期清洁电器，并即时除去食物积垢。时刻保持烹饪箱、门封、门和门碰清洁。⟶ "清洁"第 33 页
- 如果烹饪箱门或门封损坏，微波能可能会逸出。在烹饪箱门或门封损坏时，切勿使用本电器。联系售后服务部门。
- 如果电器没有配备任何外壳，微波能将会逸出。切勿拆除外壳。如有任何维护或维修工作，请联系售后服务部门。

安装和连接

本电器仅供家庭使用。

本电器设计用于一体式厨房。

请遵从专业安装说明。

电器带有插头，请连接至带有正确接地的插座上。

只有具备相应资格的电工方可安装插座或更换电源线。安装电器后，如果插头使用不便，则接线时必须提供一个全电极隔离开关，触点间隙至少为 3 mm。

请勿使用多插座转接头、电源板或拖线板。过载会导致着火危险。

电器可以安装在尺寸为 60 cm 宽的墙面柜中 (其必须至少 30 cm 深，距离地面 85 cm)。

损坏原因

注意!

- **门封严重脏污:** 如果门封非常脏，电器门在操作过程中将无法正确关闭。附近橱柜的表面可能会损坏。应始终保持门封清洁。
- **在未放食物时使用微波:** 烹饪箱中未放食物就操作电器会导致电器过载。如果烹饪箱中没有食物，切勿接通电器。唯一的例外是进行简短的烹饪容器测试时。⟶ "烹饪容器测试"第 29 页
- **微波爆米花:** 切勿将微波功率设置得过高。功率设置不要超过 600 W。爆米花袋必须放在玻璃盘上。转盘过载时可能会跳动。
- 确保沸腾溢出的液体不会经过转盘驱动装置流入电器内部。监视烹饪过程。开始时选择一个较短的烹饪时间，之后根据需要延长烹饪时间。
- 切勿在没有转盘的情况下使用微波炉。
- **产生火花:** 金属 (例如玻璃杯内的汤匙) 必须距离烹饪箱内壁和门内壁至少 2 cm。否则，火花会损坏门内壁的玻璃。
- **箔制容器:** 不要在电器中使用箔制容器。它们产生的火花会损坏电器。
- **打开电器门冷却:** 只能关上电器门让烹饪箱冷却。不要将任何东西夹在电器门中。否则，即使电器门只是略微开启，长时间下来，附近设备的表面也可能会被损坏。
- **烹饪箱中产生冷凝水:** 门窗、内壁和底板上可能会出现冷凝液。这是正常现象，不影响微波工作。为防止电器腐蚀，每次烹饪时应擦净冷凝水。

环境保护

环保处理

按照环保要求处理包装材料。

本电器已经根据欧盟有关废弃电气和电子设备的法令2012/19/EU (waste electrical and electronic equipment - WEEE)进行了标记。该指令是在全欧盟范围内关于废弃设备回收处理和再生利用的有效法律依据。

了解您的电器

在本节中，我们将解释显示屏和控件。此外，您还会了解到电器的各种功能。

提示: 根据电器型号，个别细节和颜色可能不同。

控制面板

您可以在控制面板上设置电器的各种功能。当前设置显示在显示屏上。

该概述展示了在设置了时钟时间的情况下打开电器时的控制面板。

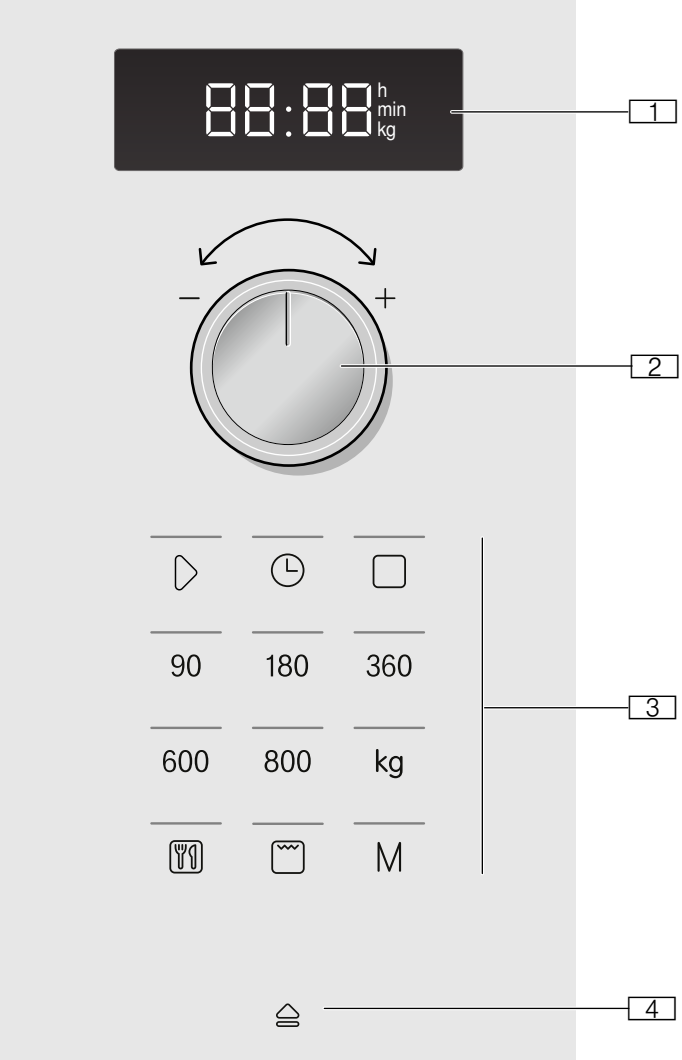

1 **显示屏**
用于时钟和烹饪时间

2 **旋转选择钮**
用于设置时钟和烹饪时间或用于设置自动烹饪程序

3 **按键**

4 **自动开门按键**

控制按键

您将在下面找到有关各个按键的简短说明。这些按键便于您简单、直接地设置电器。

按键及其含义

您将在下面找到有关各个按键的简短说明。

按键	含义
符号	
▷	启动电器
◷	设置时间
□	停止或暂停电器
90	选择 90 瓦的微波功率输出
180	选择 180 瓦的微波功率输出
360	选择 360 瓦的微波功率输出
600	选择 600 瓦的微波功率输出
800	选择 800 瓦的微波功率输出
kg	为程序选择重量
	选择自动程序
	选择烤架
M	选择存储器
⏏	打开电器门

旋转选择钮

可使用旋转选择钮更改默认值和设定值。

旋转选择钮可揿入。按压旋转选择钮可将其锁定在揿入或弹出位置。

自动开门

如果激活了自动开门，电器门弹簧会打开。您可以以手动的方式完全打开电器门。

在断电情况下不会自动开门。您可以手动开门。

提示

- 如果在操作期间打开电器门，则操作暂停。
- 在您关闭电器门时，操作不会自动继续。您必须手动重新启动该操作。
- 如果电器已经关断了很长时间，电器门将会在延时后打开。

冷却风扇

本电器装有冷却风扇。即使在微波炉关断后，风扇还会持续运转一段时间。

提示

- 在微波操作过程中，烹饪箱保持冷态。但冷却风扇仍将开启。在微波工作结束时，风机还会持续运转一段时间。
- 门窗、内壁和底板上可能会出现冷凝液。这是正常现象，不影响微波工作。请在烹饪后擦去这些冷凝液。

更改信号持续时间

电器关闭后，您将听到一声信号声。

按下 ▷ 按键大约 6 秒钟。

采用新的信号持续时间。
时钟再次出现。

具有下列选项:
短信号持续时间 – 3 声
长信号持续时间 – 30 声

附件

您可以在本章节找到有关随附附件的概览以及正确使用附件的信息。

注意!

取出盘子时，请确保转盘不移动。确保转盘正确锁止。转盘可向左或向右转动。

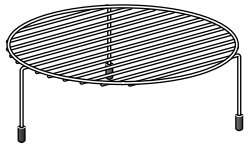

烤架
烤架用于烧烤，如肉排、香肠或面包，或用于放置烹饪容器，如浅层耐热碗碟。

提示: 将烤架放到转盘上。

转盘

提示: 切勿在没有转盘的情况下使用电器。确保其已正确咬合。转盘可顺时针或逆时针转动。

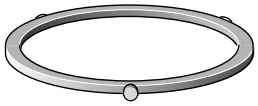

滚轮环

专用附件

可从我们的售后服务部、专卖店或在线商店购买专用附件。可在我们的手册和互联网上查找到大量产品。

其可用性以及是否可以在线订购因国家不同而各异。详细信息请参考我们的销售手册。

提示: 并非所有专用附件都适用于每台电器。购买时，请务必提供电器的确切标识号 (E 编号)。⟶ "客户服务" 第 35 页

蒸制器具	用于烹饪米饭、土豆和蔬菜

首次使用之前

本节向您介绍在第一次使用微波炉准备食物前需要执行的各个步骤。预先阅读“安全信息”一节。⟶ "重要安全信息" 第 25 页

在您使用新电器之前，您需要将转盘放置在正确位置。您还必须清洁烹饪箱和附件。

清洁烹饪箱并将转盘放置到位

在第一次使用电器制备食物之前必须清洁烹饪箱和附件。

如何把转盘放置到位

1. 将滚轮环 **a** 放入烹饪箱内的垫圈槽上。
2. 确保转盘 **b** 与烹饪箱箱底中央处的驱动轴 **c** 咬合。

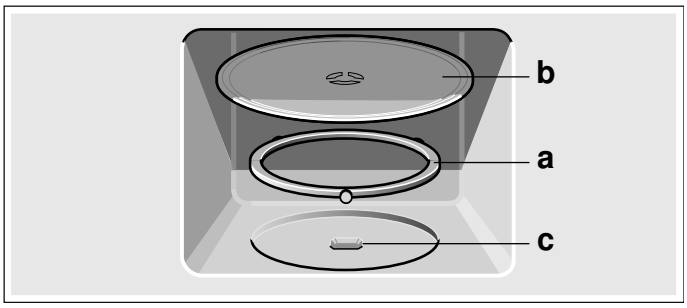

提示: 切勿在没有转盘的情况下使用电器。确保其已正确咬合。转盘可顺时针或逆时针转动。

设置时钟

在电器初次接通时或在断电后，显示屏上将显示三个零。

1. 按下 ◷ 按键。
   12:00 出现在显示屏中，◷ 按键上方的指示灯点亮。
2. 使用旋转选择钮设置时钟。
3. 再次按下 ◷ 按键。

当前时间设置好。

隐藏时钟

按下 ◷ 按键，然后按下 ☐ 按键。
显示屏为空白。

重设时钟

按下 ◷ 按键。
“12:00”出现在显示屏中。按照步骤 2 和 3 进行设置。

例如，将时钟从夏令时改为冬令时

按照步骤 1 到 3 进行设置。

加热烹饪箱

如要去除新电器的味道，可插入转盘，关上电器门，将空烹饪箱加热 10 分钟。

1. 按下 烧烤按键。
   显示屏中显示 10:00 分钟，按键上方的指示灯点亮。
2. 按下 ▷ 按键。

到时后就会发出一声信号声。按下 ☐ 按键或打开电器门。

微波

您可以使用微波快速烹饪、加热和解冻食物。您可以单独使用微波，也可以使用微波与烧烤组合。

要确保优化利用微波，请遵循有关烹饪容器的说明并熟悉指导手册后面的应用程序表中的数据。

立刻试用微波炉。例如，您可以加热一杯水，用来泡茶。

使用没有任何金饰边或银饰边的大杯，在其中放入一把茶匙。将这个装水的大杯子放在转盘上，稍微偏离中心。

1. 按下 800 W。
2. 使用旋转选择钮将其设为 1:30 分钟。
3. 按下 ▷ 按键。

1 分 30 秒后响起一个信号声。水已烧热。

⚠ 警告 – 有烫伤危险!
加热的液体有可能延时沸腾。即液体达到沸腾温度后，却没有常见的蒸汽气泡冒上液面。即使容器只是稍微振动，滚烫的液体也会突然沸腾溢出和飞溅。在加热时，一定要在容器内放一把汤匙。这会防止延时沸腾。

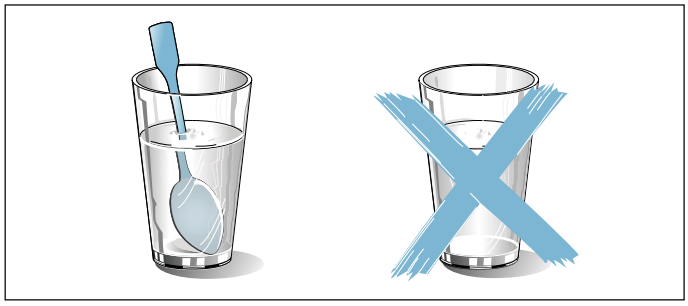

烹饪容器

并非所有烹饪容器都适用于微波。因此为了确保您的食物已被正确加热并且电器未被损坏，请仅使用适合微波的烹饪容器。

合适的烹饪容器

用玻璃、玻璃陶瓷、陶瓷或耐热塑料制成的耐热烹饪容器。这些材料可使微波穿透。

也可以使用餐盘。这样就不用将食物从一个盘换到另一个盘。如果烹饪容器带有金饰边或银饰边，只有在制造商保证它们适用于微波时才能使用。

不适合的烹饪容器

金属烹饪器皿不适合。微波无法穿透金属容器，因此放在金属容器中的食物仍是冷的。

注意!

产生火花：金属 (例如玻璃杯内的汤匙) 必须距离烹饪箱内壁和门内壁至少 2 cm。否则，火花会损坏门内壁的玻璃。

烹饪容器测试

除非烹饪箱内放有食物，否则切勿开启微波。唯一的例外是进行下面的简短的烹饪容器测试。

如果您不能确定自己的烹饪容器是否适合在微波中使用，则进行以下测试。

1. 以最大功率加热空烹饪容器 ½ 到 1 分钟。
2. 在这期间检查烹饪容器的温度。

烹饪容器摸起来应该仍是冷的或温的。

如果烹饪容器变热或产生火花，则不适用。
此时，请停止测试。

⚠ 警告 – 有灼伤危险！ ！
可触及部件在电器运转时会变得灼热。切勿触碰灼热部件。请将小孩留在安全距离以外。

微波功率设置

使用按键设置需要的微波功率。

90 W	用于解冻精细食物
180 W	用于解冻和连续烹饪
360 W	用于烹饪肉类和加热精致食物
600 W	用于加热和烹饪食物
800 W	用于加热液体

提示: 可以设置 30 分钟的 800 W 微波功率和 1 小时的 600 W 微波功率，以及 1 小时 39 分钟的其他微波功率。

设置微波

实例：微波功率设置 600 W，5 分钟
1. 按下所需要的微波功率设置。
   按键上方的指示灯点亮。
2. 使用旋转选择钮设置烹饪时间。

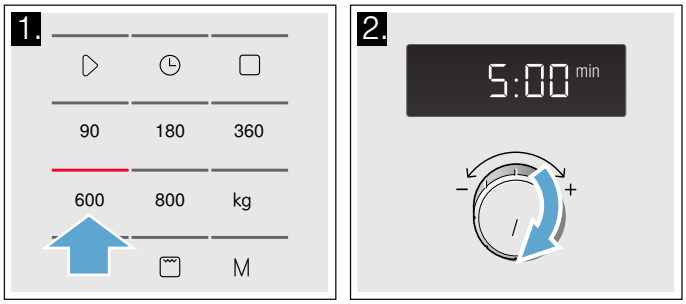

3. 按下 ▷ 按键。
烹饪时间在显示屏中倒计时。

烹饪时间到时

一个信号音响起。按下 □ 按键或打开电器门。时钟再次出现。

更改烹饪时间

这随时可以进行。使用旋转选择钮更改烹饪时间。

暂停

按一次 □ 按键或打开电器门。操作暂停。▷I 按键上方的显示符闪烁。在关门后再次按下 ▷ 按键。

取消操作

按两次 □ 按键，或打开电器门并按一次 □ 按键。

提示: 还可以先调节烹饪时间，然后设置微波功率。

烧烤

烧烤是菜式顶部焗制和上色的完美选择。
您可以单独使用烧烤，也可以使用微波与烧烤组合。

设置烧烤

1. 按下烧烤按键 ⊟。
   显示屏中显示 10:00 分钟，按键上方的指示灯点亮。
2. 使用旋转选择钮设置烹饪时间。

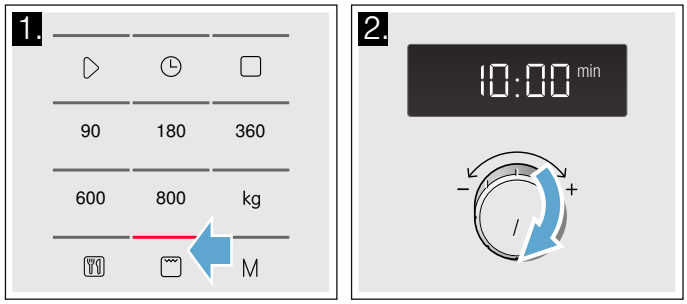

3. 按下 ▷ 按键。
烹饪时间在显示屏中倒计时。

烹饪时间到时

一个信号音响起。按下 □ 按键或打开电器门。时钟再次出现。

更改烹饪时间

这随时可以进行。使用旋转选择钮更改烹饪时间。

暂停

按一次 □ 按键或打开电器门。操作暂停。▷I 按键上方的显示符闪烁。在关门后再次按下 ▷ 按键。

更正

您可以随时更正所设的烹饪时间。

取消操作

按两次 □ 按键，或打开电器门并按一次 □ 按键。

设置微波和烧烤

实例：360 W，烧烤 ⊟，5 分钟

1. 按下所需要的微波功率设置。
   显示屏中显示 1:00 分钟，按键上方的指示灯点亮。
2. 按下烧烤按键 ⊟。

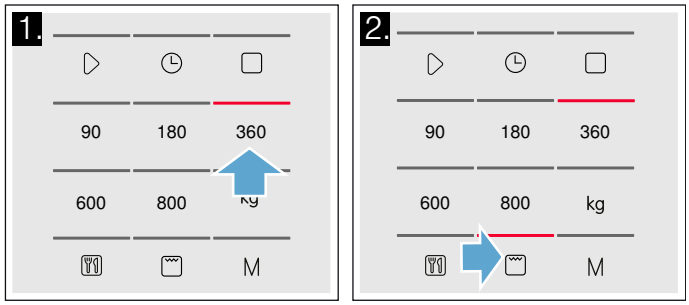

3. 使用旋转选择钮设置烹饪时间。

4. 按下 ▷ 按键。

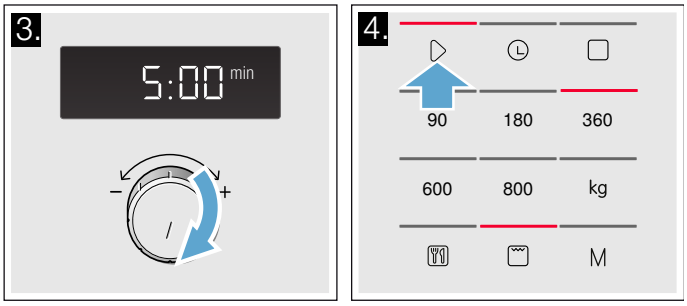

烹饪时间在显示屏中倒计时。

M 记忆

利用记忆功能，您可以将指定菜式设置保存起来，以后可随时重新调用。

当频繁烹饪某种菜式时，可以使用记忆功能。

保存存储器设置

实例：360 W，25 分钟

1. 按下 **M** 按键。
   按键上方的指示灯点亮。
2. 按下所需要的微波功率设置。
   显示屏中显示 1:00 分钟，按键上方的指示灯点亮。
3. 使用旋转选择钮设置烹饪时间。

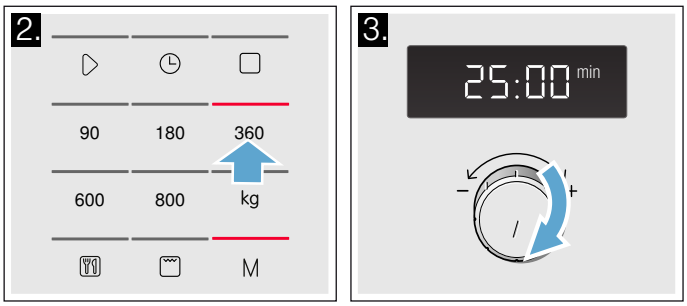

4. 按下 **M** 按键进行确认。

时钟再次出现。该设置已保存。

提示

- 您也可以只存储烧烤，或存储烧烤与微波组合。
- 您可以保存存储器设置并立即启动电器。完成后，不要按 **M**，而按下 ▷ 按键。
- 您无法连续保存多个微波功率设置。
- 您无法保存自动程序。

添加到存储器

1. 按下 **M** 按键。
   旧设置出现。
2. 按照步骤 1-4 保存新程序。

启动存储器

可轻松启动所保存的程序。将食物放入电器中。关闭电器门。

1. 按下 **M** 按键。
   显示已保存的设置。
2. 按下 ▷ 按键。

烹饪时间在显示屏中倒计时。

烹饪时间到时

一个信号音响起。按下 □ 按键或打开电器门。时钟再次出现。

暂停

按一次 □ 按键或打开电器门。操作暂停。▷I 按键上方的显示符闪烁。在关门后再次按下 ▷ 按键。

取消操作

按两次 □ 按键，或打开电器门并按一次 □ 按键。

程序

您可以通过各种程序轻松烘焙食物。选择程序，然后输入食物的重量。随后程序会应用最适用的设置。

提示: 有 8 种程序供选。

设置程序

选择程序后，进行如下设置:

1. 反复按下 [P] 按键，直至出现所需的程序编号。
   按键上方的指示灯点亮。
2. 按下 kg 按键。
   显示屏中显示建议的重量，按键上方的指示灯点亮。

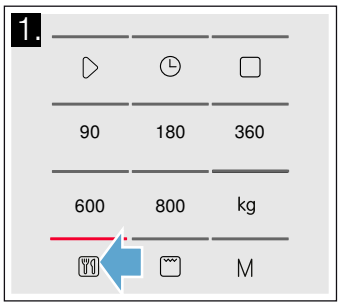

3. 转动旋转选择钮，指定菜肴重量。
4. 按下 ▷ 按键。

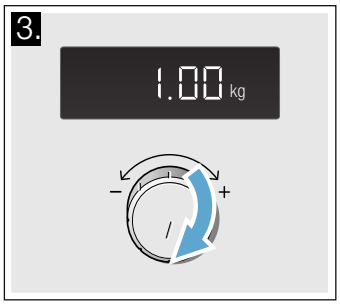

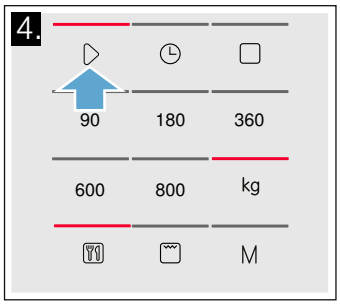

您将看到程序的烹饪时间倒计时。

烹饪时间到时

一个信号音响起。按下 □ 按键或打开电器门。时钟再次出现。

更正

按两次 □ 按键，并重设。

暂停

按一次 □ 按键或打开电器门。操作暂停。▷I 按键上方的显示符闪烁。在关门后再次按下 ▷ 按键。

取消操作

按两次 □ 按键，或打开电器门并按一次 □ 按键。

提示

- 对于一些程序，在经过一定时间后会发出一声信号。打开电器门，搅拌食物或翻转肉类或家禽。在关门后再次按下 ▷ 按键。
- 可以使用 [P] 或 kg 查询程序编号和重量。查询值将在显示屏中显示 3 秒钟。

使用自动程序解冻

您可以使用 4 个解冻程序解冻肉类、家禽和面包。

提示

- **准备食物**
  使用在零下 18 °C 下分块冷冻的食物，越薄越好。
  将要解冻的食物从包装内取出并称重。您需要了解重量，以便设置程序。
- 在解冻肉块、家禽时会有汁液产生。在翻转肉和家禽时要将这些汁液倒干净；禁止将这些汁液用作其它用途或让汁液接触其它食物。
- **烹饪容器**
  将食物放在微波炉专用浅盘中，例如瓷盘或玻璃盘，但不要盖盖子。
- **静置时间**
  解冻后的食物应静置 10 到 30 分钟，直到温度均匀。
  大块肉要比小块肉静置更长时间。用肉糜制作的肉块和菜品应分开后再静置。
  达到静置时间后，即便较厚肉块的中心仍未解冻，也可进一步进行烹制。此时，可以去除家禽的内脏杂碎。
- **信号声**
  对于一些程序，在经过一定时间后会发出一声信号。打开电器门，分割食物或翻转肉类或家禽。关闭电器门，然后按下 启动 按钮。

程序号		烹饪容器	重量范围 (kg)
	解冻		
P 01	肉糜	打开	0.20 - 1.00
P 02	肉块	打开	0.20 - 1.00
P 03	鸡，鸡块	打开	0.40 - 1.80
P 04	面包	打开	0.20 - 1.00

使用自动程序烹饪

您可以使用 3 个烹饪程序来烹饪米饭、土豆或蔬菜。

提示

- **烹饪容器**
  食物必须放在带盖的微波器皿中进行烹饪。使用大而深的器皿烹饪米饭。
- **准备食物**
  称量食物重量。您需要了解重量，以便设置程序。
  米饭:
  不要使用可煮袋装米。按照包装上的说明加入所需水量。水量通常为米量的两到三倍。
  土豆:
  做水煮土豆时，将新鲜土豆切成均匀的小块。每 100 g 土豆添加一大汤匙水和少量盐。
  新鲜蔬菜:
  称量摘净的新鲜蔬菜的重量。将蔬菜切成均匀的小块。每 100 g 蔬菜加入一大汤匙水。
- **信号声**
  在程序运行期间，一段时间后会有信号发出。搅拌食物。
- **静置时间**
  程序结束后，再次搅拌食物。应将食物再静置 5 到 10 分钟，直到温度均匀。
  烹饪结果取决于食物的质量和均匀性。

程序号		烹饪容器	重量范围 (kg)
	烹饪		
P 05	米饭	有盖子	0.05 - 0.2
P 06	土豆	有盖子	0.15 - 1.0
P 07	蔬菜	有盖子	0.15 - 1.0

组合烹饪程序

提示

- **烹饪容器**
  用不太大且耐热的微波烹饪容器烹饪食物。
- **准备食物**
  将食物从包装内取出并称重。如果无法输入精确的重量，应四舍五入。
- **静置时间**
  当程序结束后，让食物再静置 5 到 10 分钟，直到温度均匀。

程序号		烹饪容器	重量范围 (kg)
	组合程序		
P 08	冷冻烘焙，最深 3 cm	打开	0.4 - 0.9

清洁

只要精心保养和清洁，您的电器将在未来的很长一段时间内保持其外观，并能正常工作。以下说明应如何正确保养和清洁电器。

⚠ 警告 – 有灼伤危险!
电器会变灼热。切勿在关断电器后立即清洁电器。让电器冷却。

⚠ 警告 – 有电击危险!
请勿使用高压清洁器或蒸汽清洁器，以防触电。

⚠ 警告 – 有受伤危险!
电器门玻璃如果有刮伤，可能会导致裂开。请不要使用玻璃刮刀、剧烈或腐蚀性的清洁用品或洗涤剂。

⚠ 警告 – 有严重损害健康的危险!
如果清洁不当，电器表面可能会损坏。微波能可能会逸出。定期清洁电器，并即时除去食物积垢。⟶ "清洁剂" 第 33 页

⚠ 警告 – 有电击危险!
不要将电器浸入水中进行清洁，也不要在水枪下进行清洁。

提示: 微波炉若有异味，例如在烹制鱼等食物之后，这很容易清除。将几滴柠檬汁滴入一杯水中。务必在容器中放一把汤匙，以防延时沸腾。以最大微波功率将水加热 1 至 2 分钟。

清洁剂

为了防止因清洗剂使用不当而损坏各种表面，请遵守下表中的信息。

请勿使用:

- 强烈的或腐蚀性的清洁剂。
- 金属或玻璃刮刀清洁门面板。
- 金属或玻璃刮刀清洁门封。
- 硬的清洗垫或海绵。
- 高酒精含量的清洗剂。

新海绵布使用前要彻底清洗。

区域	清洁用品
电器前面板	热肥皂水：用洗碗布清洁并用软布擦干。不要用金属或玻璃刮刀进行清洁。
不锈钢前面板	热肥皂水：用洗碗布清洁并用软布擦干。立即清除水垢、油脂、淀粉和蛋白 (例如蛋清) 形成的斑点和斑块。这些污点或溅出物可能会引起腐蚀。不锈钢专用清洁产品可从我们的售后服务部门或专业零售商处获取。请勿使用玻璃清洁器、金属或玻璃刮刀进行清洁。
不锈钢制成的烹饪箱	热肥皂水或醋溶液：用洗碗布清洁并用软布擦干。请勿使用烤箱喷雾剂或任何其他腐蚀性烤箱清洁剂或磨蚀性材料。擦洗片、粗糙的海绵和平底锅清洗物品均不适用。这些物品会刮伤表面。让内部表面彻底干燥。
烹饪箱中的凹槽	湿布：水不得经过转盘驱动装置流入电器内部。使用布擦干转盘驱动装置。
转盘和滚轮环	热肥皂水：当将转盘放回凹槽时，其必须正确咬合。
烤架	热肥皂水：浸泡并用洗碗布或刷子清洁。不要刷洗。不要用金属或玻璃刮刀进行清洁。
门面板	玻璃清洁剂：用洗碗布清洁。不要使用玻璃刮刀。

基本设置

您可以更改电器的基本设置来满足您的需求。

设置		选项	
1	按键声音	On*	开启
		OFF	关断 按键声音 (将针对 ▷ 和 □ 按键保持开启)
2	演示模式	dEO	电器关断。您可以使用按钮和显示屏，但按钮不会激活电器上的任何功能 (即微波炉未通电)。 演示模式主要由经销商使用。
* 出厂设置 (出厂设置可能根据电器型号的不同而不同)			

如果您愿意，您可更改电器上的按键声音。

更改按键声音

当这样操作时，必须关断电器。

1. 同时按下并按住 ▷ 和 □ 按键几秒钟。
   显示屏上将显示 1。
2. 触摸 ▷ 按键。
   On 将开始在显示屏中闪烁。
3. 将旋转选择钮转动至 OFF。
4. 触摸 ▷ 按键。
   设置已应用。
5. 触摸 □ 按键。

按键声音已关闭。
您可随时更改该设置。

故障检修

如果发生故障，原因往往很简单。在给售后服务部打电话前，请阅读故障表，尝试自行解决故障。

建议: 如果菜肴并未达到您的预期效果，请参见以下章节，您会在其中找到大量与优化设置相关的说明和提示。⟶ "经由我们烹饪工作室测试过的菜谱"第 36 页

⚠ 警告 – 有电击危险!
修理不当是很危险的。只能由我们经过培训的售后服务人员来维修电器和更换损坏的电源线。如果电器发生故障，请拔下电器电源插头，或断开熔断器盒中的断路器。联系售后服务部门。

故障表

故障	可能的原因	纠正措施 / 信息
电器不工作	插头没有插入电源	将电器连接至电源
	电源故障	检查其他厨房电器是否工作
	断路器/保险丝故障	检查保险丝盒，确保电器断路器/保险丝工作正常
	操作故障	在保险丝盒中，关断电器的断路器/保险丝，并在大约 10 秒后重新打开
显示屏上三个零亮起。	电源故障	重设时间。
电器不工作。烹饪时间出现在显示屏中。	旋转选择钮被意外按下。	按下 □ 按键。
	在进行设置后没有按下 ▷ 按键。	按下 ▷ 按键或使用 □ 按键取消设置。
微波不工作。	门没有完全关闭。	检查门内是否有食物残余物或碎屑。
	没有按下 ▷ 按键。	按下 ▷ 按键
食物加热时间比往常长	微波功率输出设置的过低。	选择较高的微波功率设置。
	在电器中放置了比正常值更多的食物。	双倍的食物量 = 双倍的烹饪时间。
	食物比往常要冷。	在加热过程中搅拌或翻转食物 。
转盘发出刮擦声或打磨声。	转盘驱动装置周围有污物或碎屑。	清洁烹饪箱中的转盘垫圈和凹槽。
微波因未明原因停止。	微波炉发生故障。	如果该故障重复发生，请致电售后服务部。
显示屏上显示 **M**。	电器处于演示模式	停用演示模式。 ⟶ "基本设置"第 34 页
出错信息 "E - 3"	自动开门系统故障。	如果显示出错信息，请关断电器，然后重新开启；如果该信息消失，说明这是一次性的问题。如果再次发生故障或仍然显示错误信息，请联系售后服务部门并提供故障代码。

客户服务

如果您的电器需要修理，我们为您提供售后服务。我们会找出合适的解决方法，并尽量避免售后人员不必要的上门服务。

E 编号和 FD 编号

来电时，请提供产品号 (E 编号) 和生产号 (FD 编号)，以便我们为您提供正确的建议。打开烹饪箱门时，可以在右侧看到写有这些编号的铭牌。

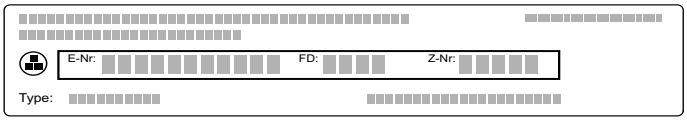

您可以在以下空白处记下电器编号和售后服务部的电话号码，以便在需要这些号码时不用花时间去找。

E 编号		**FD 编号**	

售后服务 ☏

请注意，在误用电器的情况下，即使在保修期内，售后服务技术人员上门服务时也会收取费用。

请在随设备提供的客户服务列表中查找所有国家的联系信息。

预约工程师上门及产品咨询
中文　400 885 5888
　　电话费率取决于所用网络。

制造商的专业水平值得您信赖。因此，将由受过专业训练的技术服务人员使用原装电器零件为您维修。

本电器符合标准 EN 55011 和 CISPR 11。它属于分组 2 中的 B 类产品。

分组 2 表示微波炉的生产目的是用于加热食物。B 类表示本电器适合私人家庭使用。

制造商信息:
制造商：博西家用电器（中国）有限公司
地址：江苏省南京市中山路中南国际大厦20，21楼

执行标准:
GB 4706.1-2005
家用和类似用途电器的安全 第1部分：通用要求
GB 4706.21-2008
家用和类似用途电器的安全 微波炉，包括组合型微波炉的特殊要求
GB 4706.22-2008
家用和类似用途电器的安全 驻立式电灶、灶台、烤箱及类似用途器具的特殊要求
GB 24849-2010
家用和类似用途微波炉能效限定值及限定等级
GB19606-2004
家用和类似用途电器噪声限值

技术参数

额定电压和额定频率	220 V AC，50 Hz
微波输入功率	1270 W
微波输出功率	800 W
烧烤输入功率	1000 W
额定微波功率	2450 MHz
断路器/保险丝额定值	10 A
噪音	57 dB
能效等级	一级
尺寸 (高/宽/深)	
- 电器	382 x 594 x 317 mm
- 烹饪箱	201 x 308 x 282 mm
VDE 认证	是
CE 标记	是

经由我们烹饪工作室测试过的菜谱

在下面的表格中，提供了各种备选食谱及其理想设置。它为您列出了最适合您的菜式的微波功率设置。您可以单独使用微波，也可以使用微波与烧烤组合。我们列出了关于烹饪容器和制备方法的一些提示。

提示

- 表格中指定的时间仅供参考。确切时间取决于食物的质量和成分。
- 表格中通常规定时间范围。请首先设置最短的时间，然后根据需要延长时间。
- 在从烹饪箱中取出烹饪容器时，一定要使用烤箱布或烤箱手套。

实际情况可能是，您要烹饪的食物量与表格中规定的不同。操作微波有一个经验法则：两倍量 = 几乎两倍时间，一半量 = 一半时间。

一定要将烹饪容器放在转盘上。

下面的表格为您提供了各种微波选项和设置。

适用烹饪容器

用玻璃、玻璃陶瓷、陶瓷或耐热塑料制成的耐热烹饪容器均适用。这些材料允许微波通过。

也可以使用餐盘。这样就不用将食物从一个盘换到另一个盘。如果烹饪容器带有金饰边或银饰边，只有在制造商保证它们适用于微波时才能使用。

不适合的烹饪容器

金属烹饪器皿不适合。金属不允许微波通过。放在金属容器中的食物仍是冷的。

注意!

火花：金属 (例如玻璃杯内的汤匙) 必须距离烹饪箱内壁和门内壁至少 2 cm。否则，火花会损坏门内壁的玻璃。

除霜

将敞口容器中的冷冻食品放在转盘上。

鸡腿和翅膀等细嫩的部位或烤肉脂肪多的外层可以用小片铝箔包裹。切勿让铝箔接触烹饪箱壁。在解冻时间经过一半时，可以去除铝箔。

在解冻肉块、家禽时会有汁液产生。在翻转肉和家禽时要将这些汁液倒干净；禁止将这些汁液用作其它用途或让汁液接触其它食物。

在解冻期间翻转或搅拌食物一次或两次。大块食物应多翻转几次。

将解冻过的食物继续在室温下放置 10 到 20 分钟，让温度稳定下来。此时，可以去除家禽的内脏杂碎。当内部的一小部分被冷冻时，肉类还可进一步加工。

解冻提示

到达时间，但是食物没解冻、没热或没熟。	设置更长的时间。量大、堆放的食物需要更长的时间。
到达时间，食物的边缘过热，但中部没熟。	在烹饪过程中搅拌，下次选择一个较低的微波功率设置和较长的烹饪时间。
在解冻之后，家禽或肉外部已解冻，但中部没解冻。	下一次，选择一个较低的微波功率设置。如果需要解冻的食物量大，要翻转几次。

除霜	重量	微波功率设置 (W)	烹饪时间 (分钟)	注意
整块牛肉、小牛肉或猪肉 (带骨或去骨)	800 g	180 90	15 10-20	-
	1 kg	180 90	20 15-25	
	1.5 kg	180 90	30 20-30	
肉块或肉片 (牛肉、小牛肉或猪肉)	200 g	180 90	2 4-6	翻转时将已解冻的部分分开
	500 g	180 90	5 5-10	
	800 g	180 90	8 10-15	
五花肉糜	200 g	90	10	尽量平放冷冻食品 翻转数次，取出所有解冻的菜肴
	500 g	180 90	5 10-15	
	800 g	180 90	8 10-20	
家禽或家禽块	600 g	180 90	8 10-20	将已解冻的部分分开
	1.2 kg	180 90	15 10-20	

除霜	重量	微波功率设置 (W)	烹饪时间 (分钟)	注意
鱼块、鱼排或鱼片	400 g	180 90	5 10-15	将已解冻的部分分开
蔬菜，例如豌豆	300 g	180	10-15	-
水果，例如覆盆子	300 g	180	7-10	在解冻期间小心地搅拌，将已解冻的部分分开
	500 g	180 90	8 5-10	
黄油，解冻	125 g	180 90	1 2-3	去除所有包装
	250 g	180 90	1 3-4	
条形面包	500 g	180 90	6 5-10	-
	1 kg	180 90	12 10-20	
干蛋糕，例如海绵蛋糕	500 g	90	10-15	仅用于不加糖衣、奶油或奶黄酱的蛋糕，分离蛋糕块。
	750 g	180 90	5 10-15	
湿蛋糕，例如水果馅饼、干酪蛋糕	500 g	180 90	5 15-20	仅适用于不加糖衣、奶油或白明胶的蛋糕
	750 g	180 90	7 15--20	

加热冷冻食物

提示

- 将熟食从包装内取出。放入可以微波加热的烹饪容器，加热过程会更快、更均匀。菜肴中的不同成分所需要的加热时间可能不一样。
- 平摊食物的烹饪速度比堆放食物的烹饪速度快得多。因此，应摊开食物，使其在烹饪容器内尽量摊平。不应将食物相互叠放在一起。
- 一定要盖上食物。如果烹饪容器没有合适的盖子，则用盘子或专用微波薄膜盖上。
- 烹饪期间应搅拌或翻转食物 2 到 3 次。
- 在加热后，继续让食物保持 2-5 分钟，以便温度均匀。
- 当从电器中取出烹饪容器时，一定要使用烤箱布或烤箱手套。

加热冷冻食物	重量	微波功率设置 (瓦特)	烹饪时间 (分钟)	注意
套餐、点餐、即食餐 (2-3 个元器件)	300-400 g	600	8-11	-
汤	400 g	600	8-10	-
炖肉	500 g	600	10--13	-
带调味料的肉条或肉片，例如菜炖牛肉	500 g	600	12-17	搅拌时将肉块分开
烘焙，例如意式烤宽面和意式烤碎肉卷	450 g	600	10-15	-
配菜，例如米饭、意大利面	250 g	600	2-5	加一些汁液
	500 g	600	8-10	
蔬菜，如豌豆、椰菜、胡萝卜	300 g	600	8-10	向盘子里倒水，使水淹没盘底
	600 g	600	14-17	
菠菜奶油沙司	450 g	600	11-16	烹饪时不另外加水

加热食物

注意!

金属 (例如玻璃杯内的汤匙) 必须距离烹饪箱内壁和门内壁至少 2 cm。否则，火花会损坏门内壁的玻璃。

提示

- 将熟食从包装内取出。放入可以微波加热的烹饪容器，加热过程会更快、更均匀。菜肴中的不同成分所需要的加热时间可能不一样。
- 一定要盖上食物。如果烹饪容器没有专用的盖子，请用盘子或专用微波薄膜盖上。
- 在加热期间搅拌或翻转食物几次。检查温度。
- 在加热后，继续让食物保持 2-5 分钟，以便温度均匀。

- 当从电器中取出烹饪容器时，一定要使用烤箱布或烤箱手套。

⚠ 警告 – 有烫伤危险!
加热的液体有可能延时沸腾。即液体达到沸腾温度后，却没有常见的蒸汽气泡冒上液面。即使容器只是稍微振动，滚烫的液体也会突然沸腾溢出和飞溅。在加热时，一定要在容器内放一把汤匙。这会防止延时沸腾。

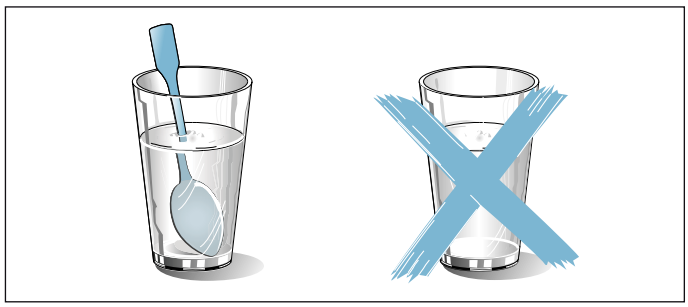

加热菜式	重量	微波输出功率 (W)	烹饪时间 (分钟)	注意
饮品	200 ml	800	2-3	在玻璃杯中放入一把汤匙；不要让酒类饮品过热；在加热期间不时检查
	500 ml	800	3-4	
婴儿食品，例如奶瓶	50 ml	360	约为 ½	没有盖子。加热后要摇匀。必须检查温度!
	100 ml	360	约为 1	
	200 ml	360	1½	
汤，1 杯	200 g	600	2-3	-
汤，2 杯	400 g	600	4-5	-
套餐、点餐、即食餐 (2-3 个元器件)	350-500 g	600	4-8	-
带酱汁的肉	500 g	600	8-11	分开肉块
炖肉	400 g	600	6-8	-
	800 g	600	8-11	-
蔬菜，1 份	150 g	600	2-3	加一些汁液
蔬菜，2 份	300 g	600	3-5	

烹饪食物

平摊食物的烹饪速度比堆放食物的烹饪速度快得多。因此，应摊开食物，使其在烹饪容器内尽量摊平。不应将食物相互叠放在一起。

在微波炉中自行烹饪食物 - 务必在烹饪容器上使用盖子。将烹饪容器直接放在转盘上。如果烹饪容器没有合适的盖子，请用盘子或专用微波薄膜盖上。

这将有助于食物保持风味。这意味着您可以少用盐和调味料。

在烹饪后，继续让食物保持 2-5 分钟，以便温度均匀。

当从电器中取出烹饪容器时，一定要使用烤箱布或烤箱手套。

烧烤:
在烤架上烧烤时，一定要关闭烹饪箱门，且不预热。

必须将烤架放在转盘上。

微波和烧烤组合:
组合模式特别适合烘焙和焗烤。

必须将烹饪容器放在转盘上，烹饪时切勿覆盖食物。

在烤制时，使用深盘子。这将有助于保持烹饪箱整洁。

用大号浅底烹饪容器烘焙和焗烤。食物在窄深的容器中需要烹饪更长时间，且顶部有更多的部分变成褐色。

检查烹饪容器尺寸与烹饪箱是否相称。不能过大，转盘必须能够转动。

一定要设置最大的烹饪时间。在经过规定的较短时间后检查食物。

在切肉前继续将肉静置 5 - 10 分钟。这样肉汁分布比较均匀，在切肉时不会流出。

对于烘焙和焗烤食品，在电器关断后，应继续在电器中留 5 分钟。

表格中的所有给定值仅作为参考，这些数值会随着食物特性而发生变化。

烹饪食物	附件	微波功率设置 (W)	烹饪时间 (分钟)	注意
整鸡，1.2 kg	带盖烹饪容器	600	25-30	烹饪中途翻转一下
小鸡块，例如 1/4 只鸡，800 g	不带盖烹饪容器，烤架	360 W + ▭	30-40	将肉块带皮的一侧朝上，不翻转
冷冻腌渍鸡翅，800 g	不带盖烹饪容器，烤架	360 W + ▭	15-25	不翻转
去皮猪肉 约为 750 g，例如猪颈肉	不带盖烹饪容器	360 W + ▭	40-50	翻转一次或两次
熏肉片，约 8 片	烤架	180 W + ▭	10-15	-
肉糕，750 g	不带盖烹饪容器	600 360 W + ▭	20-25 25-35	烹饪时不盖盖子 最大 6 cm 深

烹饪食物	附件	微波功率设置 (W)	烹饪时间 (分钟)	注意
鱼，如鱼排，400 g	不带盖烹饪容器	600	10-15	根据需要加入水、柠檬汁或酒
鱼块，焗烤，约为 400 g	不带盖烹饪容器	360 W +	10-15	烤制前先对鱼进行解冻
鱼肉串烧，4-5 条	烤架	180 W +	10-15	使用木扦
甜饼，例如 酸奶酪和水果蛋奶酥，1 kg	不带盖烹饪容器	360 W +	30-35	最大 5 cm 深
由生配料烤制的开胃品，如烤通心粉，1 kg	不带盖烹饪容器	360 W +	30-35	撒上奶酪，最大 5 cm 深
由熟配料烤制的开胃品，如如法式奶酪焗土豆，1 kg	不带盖烹饪容器	360 W +	30-40	最大 4 cm 深
焗烤汤，例如洋葱汤，2-4 杯	不带盖烹饪容器		约为 15-20	-
新鲜蔬菜，250 g	带盖烹饪容器	600	5-10	将蔬菜切成大小均匀的小块； 每 100 g 蔬菜中加入 1 到 2 汤匙水； 在烹饪过程中搅拌
新鲜蔬菜，500 g	带盖烹饪容器	600	10-15	-
蔬菜串烧，4-5 条	烤架	180 W +	15-20	使用木扦
土豆，250 g	带盖烹饪容器	600	8-10	将土豆切成大小均匀的小块； 每 100 g 加入 1 到 2 汤匙水； 在烹饪过程中搅拌
土豆，500 g	带盖烹饪容器	600	11-14	
土豆，750 g	带盖烹饪容器	600	15-22	
米饭，125 g	带盖烹饪容器	800 180	5-7 12-15	加入双倍的汁液
米饭，250 g	带盖烹饪容器	800 180	6-8 15-18	
面包 (预烤制)，2-4 片	烤架		第 1 面：约为 2-4 第 2 面：约为 2-4	-
带配料的吐司，2-6 片	烤架		7-10	取决于配料
水果蜜饯，500 g	带盖烹饪容器	600	9-12	-
甜食，如牛奶冻 (即食) 500 ml	带盖烹饪容器	600	6-8	在烹饪过程中用搅蛋器彻底搅拌牛奶冻两到三次。

微波使用技巧

您无法找到准备烹饪的食物量的相应设置信息。	依据下面的经验，酌情增加或减少烹饪时间： 双倍的食物量 = 几乎双倍的烹饪时间 一半的量 = 一半的烹饪时间
食物变得太干。	下一次，缩短烹饪时间或选择较低的微波功率设置。给食物盖上盖子，并加入更多的汁液。
在到达时间后，食物没解冻、没热或没熟。	设置更长的时间。量大、堆放的食物需要更长的时间。
在到达时间后，食物的边缘过热，但中部没熟。	在烹饪过程中搅拌，下次选择一个较低的微波功率设置和较长的烹饪时间。
在解冻之后，家禽或肉外部已解冻，但中部没解冻。	下一次，选择一个较低的微波功率设置。如果需要解冻的食物量大，要翻转几次。

冷凝

门窗、内壁和底板上可能会出现冷凝液。这是正常现象。
不会影响微波的作用。请在烹饪后擦去这些冷凝液。

测试菜谱

符合标准 EN 60705:2012、IEC 60705:2010 和 EN 60350-1:2013 或 IEC 60350-1:2011

编制这些表格是为了供测试学会使用，方便他们对电器进行检查。

微波烹饪

餐点	微波功率输出 (W)，烹饪时间 (分钟)	说明
奶油蛋羹，750 g	360 W，12-17 分钟 + 90 W，20-25 分钟	将 20 x 25 cm 耐热玻璃器皿放在转盘上。
海绵	600 W，8-10 分钟	将 22 cm 耐热玻璃器皿放在转盘上。
肉饼	600 W，20-25 分钟	将耐热玻璃器皿放在转盘上。

微波解冻

餐点	微波功率输出 (W)，烹饪时间 (分钟)	说明
肉	180 W，5-7 分钟 + 90 W，10-15 分钟	将 22 cm 耐热玻璃器皿放在转盘上。

组合微波烹饪

餐点	微波功率设置 (W)，烹饪时间 (分钟)	说明
法式焗烤土豆	烧烤 + 360 W，35-40 分钟	将直径为 22 cm 的耐热玻璃餐盘放在转盘上。

食品接触用材料及制品信息

本产品中下列预期或可能与食品接触用材料及制品， 符合 GB 4806.1-2016 及相应食品接触材料及制品的食品安全国家标准要求。

食品接触用材料	用途	执行标准	备注
冷轧钢板 SPP 基材/搪瓷表面	烤盘等	GB 4806.3-2016 GB 4806.9-2016	不得长时间接触酸性食品
云母	波导盖等	GB 4806.4-2016	----
玻璃	门中窗，玻璃转盘等	GB 4806.5-2016	----
聚对苯二甲酸乙二醇酯树脂 PET	门贴等	GB 4806.7-2016	只接触水性食品和油脂及表面含油脂食品
不锈钢 06Cr19Ni10	金属发热管等	GB 4806.9-2016	----
不锈钢 10Cr17	内胆，发热管罩等	GB 4806.9-2016	----
钢 Q195 镀铬/镍/铜	烤架等	GB 4806.9-2016	不得接触酸性食品
冷轧钢板 SPCC\SPCD/缩水甘油封端双酚 A 环氧丙烷共聚物涂层	门体，内胆等	GB 4806.9-2016 GB 4806.10-2016	只接触水性食品和油脂及表面含油脂食品
硅橡胶	门体胶滴，密封圈等	GB 4806.11-2016	只接触水性食品

注 1: 上表包含了本公司生产的此类产品的预期或可能与食品接触的全部部件，本产品的部件以实际配置为准。

注 2: 请根据说明书要求正常使用本产品，限制使用条件见上表备注栏。

未按上述要求使用本产品所造成的食品污染以及相应的人身损害由使用人自行承担相应法律责任。

如您对此有任何疑问，请拨打本产品所提供的公司客服电话。

产品中有害物质的名称及含量

部件名称	有害物质					
	铅 (Pb)	汞 (Hg)	镉 (Cd)	六价铬 (Cr(VI))	多溴联苯 (PBB)	多溴二苯醚 (PBDE)
磁控管	○	○	○	○	○	○
高压变压器	○	○	○	○	○	○
电机	○	○	○	○	○	○
发热管组件	○	○	○	○	○	○
照明灯	○	○	○	○	○	○
电容夹	○	○	○	○	○	○
高压二极管组件	×	○	○	○	○	○
温控器	○	○	×	○	○	○
微动开关	○	○	○	○	○	○
导线	○	○	○	○	○	○
保险管组件	○	○	○	○	○	○
滤波板	×	○	×	○	○	○
电源线	×	○	○	○	○	○
炉门组件	○	○	○	○	○	○
控制面板组件	○	○	○	○	○	○
旋钮组件	○	○	○	○	○	○
风扇组件	○	○	○	○	○	○
联锁组件（微动开关）	○	○	×	○	○	○
支架	○	○	○	○	○	○
炉脚	○	○	○	○	○	○
电脑板	×	○	×	○	○	○
腔体组件	○	○	○	○	○	○
底板	○	○	○	○	○	○
铰链组件	○	○	○	○	○	○
外罩	○	○	○	○	○	○
隔热板	○	○	○	○	○	○
导风板	○	○	○	○	○	○
烧烤架	○	○	○	○	○	○
支撑板	○	○	○	○	○	○
安装板组件	○	○	○	○	○	○
炉灯组件	○	○	○	○	○	○
导风安装板	○	○	○	○	○	○
弹簧	○	○	○	○	○	○
防溅板	○	○	○	○	○	○
波导口盖	○	○	○	○	○	○
减震垫块	○	○	○	○	○	○
转盘	○	○	○	○	○	○
发热管支撑	○	○	○	○	○	○

驱动轴	○	○	○	○	○	○
转环组件	○	○	○	○	○	○
蜂鸣器	○	○	○	○	○	○
螺母/螺钉/螺母支架	○	○	○	○	○	○

本表格依据 SJ/T 11364 的规定编制。

○：表示该有害物质在该部件所有均质材料中的含量均在 GB/T 26572 规定的限量要求以下。

×：表示该有害物质至少在该部件的某一均质材料中的含量超出 GB/T 26572 规定的限量要求。

注意：上表包含了本公司生产的此类产品的全部部件，本产品的部件以实际配置为准。

如您对此有任何疑问，请拨打本产品所提供的公司客服电话。

产品环保信息提示性说明

请按照产品说明书的要求使用和维护本产品，不当利用或者处置本产品可能会对环境和人类健康造成影响。

依照国家《废弃电器电子产品回收处理条例》的有关规定，当您计划将此产品废弃时，请将其交给具有废弃电器电子产品处理资格的处理企业进行处理。产品中有毒有害物质含量信息参照上表。

Thank you for buying a Bosch Home Appliance!

Register your new device on MyBosch now and profit directly from:

- **Expert tips & tricks for your appliance**
- **Warranty extension options**
- **Discounts for accessories & spare-parts**
- **Digital manual and all appliance data at hand**
- **Easy access to Bosch Home Appliances Service**

Free and easy registration – also on mobile phones:
www.bosch-home.com/welcome

Looking for help? You´ll find it here.

Expert advice for your Bosch home appliances, need help with problems or a repair from Bosch experts.
Find out everything about the many ways Bosch can support you:
www.bosch-home.com/service
Contact data of all countries are listed in the attached service directory.

Robert Bosch Hausgeräte GmbH
Carl-Wery-Straße 34
81739 München
Germany
www.bosch-home.com

博世家电官方微信公众号

9001277567
980427(05)